P200 TORNADO

for Microsoft Flight Simulator
by IndiaFoxtEcho Visual Simulations

USER MANUAL

Version 1.0.11 – January 2026

NOTICE – Although this manual and the simulated aircraft closely resemble their real-world counterparts in many aspects, neither should be used as source of real-world information about the aircraft. This package is not endorsed or supported by the aircraft manufacturer or by any armed service.

CHANGE LOG

Version 1.0.11 – Minor update
08-01-2025
- Added noise filter to ground mapping imagery for more realistic look
- Added graphic filter to map imagery for more realistic look
- Removed "cheat" caption on option to allow flight plan to show on map generator on request by one user
- Option to display the flight plan on map generator is now permanent and will carry over to the next flight
- Weapon configuration is now permanent and will carry over to the next flight (NOTE: on the first flight the plane may show an incorrect or empty configuration)
- Fixed minor typos in WSO menus
- Tweaks to ESRDD cooldown code

Version 1.0.10 – Minor update

- Fixed issue preventing canopy from opening in MSFS2024 walkaround mode
- Fixed glitch in wing flex animation
- Reworked engine smoke effects
- Improved Sidewinder textures
- Changed refuel probe animation code for smoother movement
- Added MSFS2024 Night Vision option for variants equipped with night vision compatible cockpits (IDS-MLU, ECR-MLU, IDS-ASSTA, ECR-ASSTA, GR4)

Version 1.0.9 – Last call

ITALY AND GERMANY LAST CALL

General
- Fixed bug causing APU door not to open
- Fixed minor glitch in WSO TACAN menu

Liveries:
IDS
- Fixed minor mistake in Luftwaffe 44-90 livery
- Fixed incorrect stencils on external tanks for some liveries
IDS-MLU
- Added 6-07, 6-22 and 6-24
ECR-MLU
- Added 6-02, 6-65 and 6-101
IDS-ASSTA
- Added 43-38, 45-57 and 45-59
ECR-ASSTA
- Added 46-23, 46-54

Version 1.0.8 – Minor updates

General:
- Fixed minor glitch in IFF code animation
- Changed IFF Mastre knob functionality so that:

in LOW mode -> mode 3 is active
in NORM mode -> mode 3C is active
in EMER code -> 7700 is forced in mode 3
- Fixed reversed animation in crash bar (is AFT in flight position)
- Removed waveguide strips from ASSTA variants

Version 1.0.7 – Minor fixes and “Pinky” livery
27-03-2024

General
- Fixed typo and incorrect name for RAPID TAKEOFF GANGING LEVER
- Fixed missing soundai configuration for some liveries
- Fixed minor glitch in VC code potentially causing microstutters on some systems

Model
- Fixed bug causing port Mauser muzzle to show on GR.4 variant

WSO Menu
- Changed code for menu self-illumination
- Fixed miscellaneous typos in menu options

Livery
- Added "Pinky" livery for GR.4

Version 1.0.6 – MSF2024 Compatibility
18-03-2024

GENERAL
- redone multiple cockpit animations for better compatibility with MSFS2024
- redone self-illumination code for better compatibility with MSFS2024
- enabled weapon models on Marketplace copies
- integrated "enhanced lighting" mod by kdfw

LIVERIES
- Added Italian Air Force 6-67 livery (IDS)
- Added Italian Air Force 50-36 livery (IDS)
- Added Italian Air Force 50-40 livery (IDS)
- Added Marineflieger 46-20 livery (IDS)
- Added Royal Air Force ZA362 Arctic livery (GR.1)
- Added Royal Air Force ZD792 livery (GR.4)

Version 1.0.5 – Minor update
30-09-2024

GENERAL
- Solved bug causing TRANSPONDER STATE variable not to change
- Added Transponder IDENT functionality
- Rewritten Throttle animation code
- Rewritten Lift Dump key binding animation
- Reorganized model structure
- Re-encoded all avionic bitmaps to .png for better efficiency and lower memory footprint

- Fixed minor bug casuing HSI window to show "TAC" instead of "APP" if APP2 is selected
- Added weight-dependent visibility conditions to pilot figures (to exclude them individually by setting their weight to zero)

FLIGHT MODEL
- Rewritten lift dump custom dynamics code

COCKPIT
- Fixed minor glitch in dark cockpit canopy textures

LIVERIES
- Fixed mistake on ZG775 "Farewell" livery
- Added IDS TTTE Italian livery (IDS)
- Added IDS TTTE German livery (IDS)
- Added GR.1 TTTE British livery (GR.1)
- Added 98-59 50-Years German special livery (IDS ASSTA)
- Added 43-97 50-Years German special livery (ECR ASSTA)
- Revised X587 Italian prototype livery (IDS)
- Added XX946 British prototype livery (IDS)
- Added D-9591 German prototype livery (IDS)

EFFECTS
- Custom wing vapour effects (light on frame rate)
- Adjusted direction of wing contrail effects
- Fixed minor bug causing the right afterburner flame to be triggered by the left engine status

SOUND PACKAGE
- Revised sound package by Echo19

NEW KEY BINDINGS:

WSO MENU CONTROL
- INCREASE NAV3 (FRACT/CARRY) -> INCREASE SELECTED OPTION NUMBER
- DECREASE NAV3 (FRACT/CARRY) -> DECREASE SELECTED OPTION NUMBER (*)
- INCREASE NAV3 (WHOLE) -> CONFIRM SELECTED OPTION
- DECREASE NAV3 (WHOLE) -> BACK TO PREVIOUS SCREEN
(*) there is a typo in the sim interface so that the event is labeled "increase"

ADDITIONAL BINDINGS
INCREASE ADF2 FREQUENCY (0.1) - TERRAIN FOLLOWING ENGAGE/DISEGNAGE
DECREASE ADF2 FREQUENCY (0.1) - HSI MODE SELECTOR
INCREASE ADF2 FREQUENCY (1) - INCREASE TFR RIDE HEIGHT
DECREASE ADF2 FREQUENCY (1) - DECREASE TFR RIDE HEIGHT
INCREASE ADF2 (10) - HUD VV/LOCKED SWITCH
DECREASE ADF2 (10) - HUD KCAS/MACH SWITCH
INCREASE ADF2 (100) - HUD RADIO/BARO SWITCH
DECREASE ADF2 (100) - HUD MAG/TRUE SWITCH

Version 1.0.4 – Minor update
26-06-2024

GENERAL
- Rectified aircraft descriptions

SOUND
- Fixed bug that prevented flyby audio playback
- WSO voice is slightly louder and the volume is now tied to the "Warnings" slider via the in-game audio menu.
- Fixed incorrect afterburner transition
- Slightly increased volume of AI flyby audio

Version 1.0.3 – Major update
EXTERNAL MODEL:
- Added GR.4 external model variation
- Added IDS ASSTAx external model variation
- Added IDS MLU external model variation
- Added ECR ASSTAx external model variation
- Added ECR MLU external model variation
- fixed minor defect in lower strobe light geometry
- fixed bug causing incorrect direction of wingtip effects in some cases
- Fixed minor geometry imperfections
- Cleanup of unused materials
- Added APU door animation
- Fixed minor misalignment in slat rails
- Fixed missing material assignment in nose mechanism pin
- Fixed glitch in MLG wheel animation

COCKPIT MODEL:
- Fixed minor geometry imperfections
- Fixed gaps in canopy glass and windshield
- Added "dark cockpit" variant
- Added lower poly cockpit variant for better performance
- Revised HUD glass material rendering
- Rearview mirrrors are now foldable, and have permanent variables assigned

WSO MENU:
- fixed bug causing "Pratica" di Mare TACAN to show as "Sigonella"
- fixed multiple bugs in IN OPTIONS page

LIVERIES:
- Minor updates to RAF monogrey liveries
- Added multiple liveries for GR.4, IDS-MLU, ECR-MLU, ASSTA and ECR-ASSTA models.

AVIONICS:
- Fixed bug preventing correct behavior of HSI in TAC mode

FLIGHT MODEL
- Revised drag tables for low subsonic performance
- Fixed bug causing a reduced or negligible effect of LD after touchdown

SYSTEMS:
- Fixed bug causing brake accumulator needle to fall below minimum pressure in some cases

- Fixed bug preventing reverse thrust buckets to deploy when using XBox controllers or throttles with physical thrust reverse movement
- Fixed bug causing incorrect throttle lever animation during reverse thrust in some instances, and with some controller devices.
- Fixed bug causing external electrical AC power to be available even if battery switch is OFF
- Fixed bug causing V/HUF control knobs to disappear if radio mode was set to DF.
- Rewritten SMS code for better multiplayer compatibility
- Fixed bug causing fuel transfer system to potentially fill tanks above 100%
- Fixed bug preventing INTAKE RAMPS TEST light to work
- Adjusted brightness of all cockpit lights for better readability

SOUND:
- New sound package by Echo19
- Added AI sounds
- Fixed bug causing excessive wind sound in external view
- Fixed bug causing 17000ft message not to play
- Revised brake pedal sound effects
- Revised tire touchdown sound effects

OTHER:
- Temporarily disabled vapour effects as many users reported FPS problems
- Adjustment to default camera position
- disabled possibility for the user to accidentally enable legacy flight model
- Reduced external camera distance

Version 1.0.0 – Initial Release

WELCOME

The Panavia Tornado is a family of twin-engine, variable-sweep wing multi-role combat aircraft, jointly developed and manufactured by Italy, the United Kingdom and Germany. There are three primary Tornado variants: the Tornado IDS (interdictor/strike) fighter-bomber, the Tornado ECR (electronic combat/reconnaissance) SEAD aircraft and the Tornado ADV (air defence variant) interceptor aircraft.

The Tornado was developed and built by Panavia Aircraft GmbH, a tri-national consortium consisting of British Aerospace (previously British Aircraft Corporation), MBB of West Germany, and Aeritalia of Italy. It first flew on 14 August 1974 and was introduced into service in 1979–1980. Due to its multi-role design, it was able to replace several different fleets of aircraft in the adopting air forces. The Royal Saudi Air Force (RSAF) became the only export operator of the Tornado, in addition to the three original partner nations. A tri-nation training and evaluation unit operating from RAF Cottesmore, the Tri-National Tornado Training Establishment, maintained a level of international co-operation beyond the production stage.

The Tornado was operated by the Royal Air Force (RAF), Italian Air Force, and RSAF during the Gulf War of 1991, in which the Tornado conducted many low-altitude penetrating strike missions. The Tornados of various services were also used in the Bosnian War, Kosovo War, Iraq War, in Libya during the 2011 Libyan civil war, as well as smaller roles in Afghanistan, Yemen, and Syria. Including all variants, 990 aircraft were built.

This package is focused on early IDS variant. External models for early GR.1 and ECR variants are also provided but they share the IDS cockpit.

MINIMUM HARDWARE REQUIREMENTS

Due to the high-detail model and textures, we suggest to use the Tornado on systems that meet or exceed the following requirements:

CPU: 3.5GHz dual core processor or better
GPU: at least 6Gb dedicated memory, Nvidia 960 or better recommended
RAM: 8.0Gb minimum
Hard Disk: 15Gb required for installation

INSTALLATION

IMPORTANT – IF YOU ARE MANUALLY UPGRADING YOUR PACKAGE FROM A PREVIOUS VERSION, PLEASE DELETE THE PREVIOUS VERSION FIRST!

This package is distributed both on the Microsoft Marketplace, SimMarket, Orbx and other vendors.

If you have purchased the package though the Marketplace, SimMarket (using their app to download it) or through Orbx Central and you have followed the on-screen instructions, no further action is required from your end. The plane should be available in the aircraft selection menu as the other default planes and should be automatically updated.

If you have purchased the package from an external vendor and the aircraft is provided as a .zip file without any installer, just unzip the content of the file into your COMMUNITY folder. The exact location of the folder will depend on your selection when you have installed Microsoft Flight Simulator. Once you have indicated where your COMMUNITY folder is, just follow the on-screen instructions.

If you have purchased the package from an external vendor and the product comes with an .exe installer, just follow the instructions on the screen. You will be asked to locate the COMMUNITY folder. The exact location of the folder will depend on your selection when you have installed Microsoft Flight Simulator. Once you have indicated where your COMMUNITY folder is, just follow the on-screen instructions.

NOTE: If you do not know where the community folder is located, you can follow this procedure:

Go to Options / General.

1.Click on "Developers" which you will find at the bottom of the list on the left.

2.Switch Developers Mode on.

3. On the Dev Menu select Tools / Virtual File System.

4. The community folder location can be found under "Watched Bases"

NOTE: If the copying the folder in the Community folder fails because of the fact that files names are too long you can proceed as follows:

1. Extract the package folder on your desktop or in any known and easily acceptable location.

2. Rename the package folder from “indiafoxtecho-tornado” to anything short and recognizable such as “tornado” or just “p200”

3. Place the renamed package folder in the Community folder

Once the aircraft is installed in the Community folder, it will be available in the aircraft selection menu next time you start Flight Simulator. If Flight Simulator was running during the install process, you need to close it and restart it for the aircraft to appear.

IMPORTANT NOTE ON THE FLIGHT MODEL

Please note that the Tornado flight model is designed to work with the new Flight Simulator flight model (Options->General->Flight Model->MODERN) . This is the default option for Microsoft Flight Simulator and it should be your setting unless you have changed it.

However, some users may have changed the flight model to "LEGACY" in order to use older FSX-derived add-on planes. The Tornado does not support to the LEGACY flight model.

CREDITS

Tornado text description taken from Wikipedia page: https://en.wikipedia.org/wiki/Panavia_Tornado

We'd like to thank the Beta testing Team and everyone who supported this project and IndiaFoxtEcho.

For questions, support and contact please write an email to indiafoxtecho@gmail.com or contact us on Facebook https://www.facebook.com/Indiafoxtecho-594476197232512/

This software package has been produced by IndiaFoxtEcho Visual Simulations, via Dei Giustiniani 24/3B 16123 Genova, Italy – copyright 2021.

ABOUT THIS MANUAL

This manual is partially based on real world documentation for the Tornado aircraft but it has been vastly cut and edited to reflect the Microsoft Flight Simulator rendition.
Sections *italics* apply only to the simulated version of the aircraft

THIS MANUAL SHALL NOT BE CONSIDERED A SOURCE FOR REAL-WORLD INFOMATION OR OPERATION OF THE TORNADO AIRCRAFT!

UPDATES

We will try our best to keep the product updated and squash significant bugs as soon as possible.
Updates are typically deployed as full packages/new installers and will be available from your distributor.
Typically updates must be manually installed in the same way as the initial release.

If you are having issues with the update, we suggest you first delete the previous version.

You should always restart the simulator after any update.

COPYRIGHT AND LEGAL STATEMENTS

This SOFTWARE PRODUCT is provided by INDIAFOXTECHO VISUAL SIMULATIONS "as is" and "with all faults."
INDIAFOXTECHO VISUAL SIMULATIONS makes no representations or warranties of any kind concerning the safety, suitability, lack of viruses, inaccuracies, typographical errors, or other harmful components of this SOFTWARE PRODUCT.
There are inherent dangers in the use of any software, and you are solely responsible for determining whether this SOFTWARE PRODUCT is compatible with your equipment and other software installed on your equipment. You are also solely responsible for the protection of your equipment and backup of your data, and INDIAFOXTECHO VISUAL SIMULATIONS will not be liable for any damages you may suffer in connection with using, modifying, or distributing this SOFTWARE PRODUCT.

REVERSE ENGINEERING OF ANY PART OF THIS PACKAGE, INCLUDING THE EXTRACTION OF 3D AND 2D ASSETS WITH ANY MEAN, IS PROHIBITED.

**PLEASE REFRAIN FROM MAKING ILLEGAL COPIES OF THIS SOFTWARE.
INDIAFOXTECHO DOES NOT INCLUDE COPY PROTECTION IN ITS SOFTWARE AS WE BELIEVE THAT LEGITIMATE CUSTOMERS ARE ENTITLED TO INSTALL THIS SOFTWARE WITHOUT ANY HASSLE OR WITHOUT WORRYING ABOUT PRODUCT KEYS, LICENSE EXPIRATION AND AVAILABILITY.
OUR COPY-PROTECTION IS IS MADE OF CONTINUOUS IMPROVEMENT, CUSTOMER SERVICE AND A FANTASTIC FAN BASE.**

THAT BEING SAID, IF YOU MAKE AN ILLEGAL COPY OF THIS SOFTWARE, NOT ONLY YOU ARE INFRINGING THE LAW – YOU ARE ALSO REDUCING THE RESOURCES FOR DEVELOPMENT OF UPDATES AND NEW PRODUCTS.

...let alone the fact that the world of simulation communities is small, and we receive notifications of copyright infringements or reverse engineering attempts directly from our loyal fans very quickly.

LICENSE RESTRICTIONS

This Tornado rendition for Microsoft Flight Simulator is provided solely for recreational, non-professional use. Please contact IndiaFoxtEcho Visual Simulations for inquiries about professional applications.

VARIANTS INCLUDED IN THIS PACKAGE

This package is strictly based on early Tornado IDS, but the package also includes external model variants. These variants will appear as different airplanes in the simulator menu.
Variants are as follows:

IDS (Interdictor Strike)	-	This is the base version of this package, and features Italian and German IDS airplanes.
GR.1	-	In this version, the external model reflects the early British configuration and Saudi IDS variant (as the Saudi IDS closer to the GR.1). Airplanes in this folder also have an unique helmet (Mark 3) and can be equipped with 2250 litres tanks.
ECR	-	Italian and German ECR variants. Airplanes in this folder can be equipped with HARM missiles.

All the variants will share the IDS cockpit, which is therefore not accurate for GR.1 and ECR.

MAIN DIFFERENCES BETWEEN THE REAL TORNADO AND THE VIRTUAL ONE

While we tried our best to provide a reasonably detailed rendition of the Tornado in Microsoft Flight Simulator, a number of differences and artistic licenses have been taken in few areas.
The main differences are:

- Flap and wing sweep system
- Flight model
- WSO station operations
- Test and weapon delivery models
- Terrain Following Mode

FLAP AND WING SWEEP SYSTEM

In order to leverage the MSFS flap system to simulate changes in lift, drag and centre of lift, the wing-sweep and flaps system in this rendition are interlinked and are both activated by the flaps sweep system.
In the real airplane, except for the obvious interlocks, the flap and wing sweep operations are independent.

The flaps lever positions are as follows:

0 (fully retracted) -	Wing sweep 67°	Flap 0°	Slat 0°	Krueger 0°
1 -	Wing 63°	Flap 0°	Slat 0°	Krueger 0°
2 -	Wing 45°	Flap 0°	Slat 0°	Krueger 0°
3 -	Wing 25°	Flap 0°	Slat 0°	Krueger 0°
4 -	Wing 25°	Flap 7°	Slat 11°	Krueger 0°
5 -	Wing 25°	Flap 26.15°	Slat 24.30°	Krueger 0°
6 (fully extended) -	Wing 25°	Flap 50°	Slat 24.30°	Krueger 116.30°

NOTE: Kruger flap movement is disabled on some variants

FLIGHT MODEL

The flight model of the aircraft has been tuned to represent a Drag Index 0 (DI 0) configuration, and will therefore exceed the performance of the real-aircraft in most configurations, although some real-world

limitations have been enforced.
Negative G force or excessive G force with flaps extended will damage the flaps.
Excessive G forces may cause structural damage.
Excessive airspeed with gear of flaps extended may permanently damage the landing gear or the flaps and wing sweep system.

The drag in the simulated aircraft has been tuned to reflect a DI 0 configuration, that is a clean aircraft with no external loads and no pylons. Please keep in mind that in MSFS drag is not dynamic and will not change depending on the loadout so the overall aircraft performance in the simulation will exceed, in many cases, the performance of the real world aircraft. For information, the default configuration of the sim (2 BOZ + 2 AIM-9 + 2 underwing tanks) will produce a DI of 48.

The real airplane,with DI 48, has a much lower top-speed (barely M1.2 at high altitude, and barely supersonic at sea level with a COMBAT power setting).

Please see the “NORMAL PROCEDURES” section for further details.

WSO OPERATIONS

Functionality in WSO station is limited but many systems have at least a basic implementation.
The main functionalities unique to the WSO stations are:

Inertial Navigation Alignment	-	It is not required to the player to perform a full IN alignment procedure, and Present Position and Heading data entry will be automatically filled and report the actual aircraft data. D31 and D32 can be manually set in the INCDU panel.
Main Computer	-	It is required that the Main Computer, IFU 1 and IFU2 and Waveform Generator are all set to ON for the aircraft to operate.
Map Generator	-	Full map generator controls are available only in the rear-cockpit, although the aircraft will always been shown at the centre of the display.
Ground mapping	-	Basic ground mapping
Rapid Data Entry	-	If the plane spawns cold and dark, it is necessary to perform the RDE procedure from the CVR to have the flight plan available. Flight plan can only be created in the game-interface.
TV/Tab	-	Basic functionality is provided, but only PLAN and NAV modes have been developed. PLAN mode requires a flight plan.
Selective Jettison	-	Selective jettison selections are only possible in the WSO station
Waypoint management	-	MAN/AUTO navigation mode selection and waypoint selection can only be operated in the rear cockpit.

TEST AND WEAPON DELIVERY MODES

Some of the systems (e.g. the HUD) do not have a full simulation of the test modes. Weapon delivery data presentation is NOT implemented.

TERRAIN FOLLOWING MODE

Unlike the real system, the TFR mode will not actually look ahead of the aircraft (as this function is not supported natively by MSFS) and will try to guess the terrain profile using data collected by the Radar Altimeter. A detailed description is provided in section 3.

NOSE WHEEL-STEERING

This rendition of the Tornado implements MSFS nose-wheel steering (NWS) system and associated controls. Please see the Nose-wheel steering chapter for operation and modes.

To associate a control to this function, you should assign a control to the “SET NOSE WHEEL STEERING TO LIMIT” command, in the MISCELLANEOUS group. This will allow you to cycle between NWS OFF, LOW and HIGH settings.

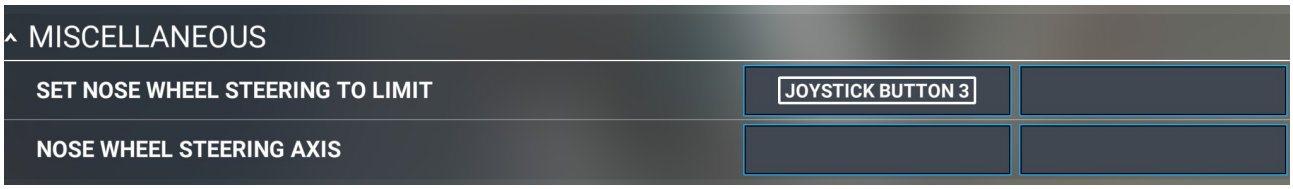

THROTTLE, AFTERBURNER DETENT AND ENGINE MANAGEMENT

This Tornado rendition includes afterburner toggle/detent controls. This means that, much like the default F/A-18, the afterburner will **not engage** unless the pilot actively presses a specific “toggle” button – this is done in order to mimic the afterburner detent which is present in the real world throttle lever, and it is meant to prevent an inadvertent activation from the pilot.
Also the throttle movement will be limited to 80% of the available travel, unless the afterburner detent is released.
This control is not assigned in many control presets, so you may need to add it.

If you **do not wish to to have the afterburner toggle functionality**, or you have a mechanical detent on your throttle, you can set the “TOGGLE AFTERBURNER” control to your throttle axis (as in the figure below) so that the TOGGLE is associated to throttle movement.

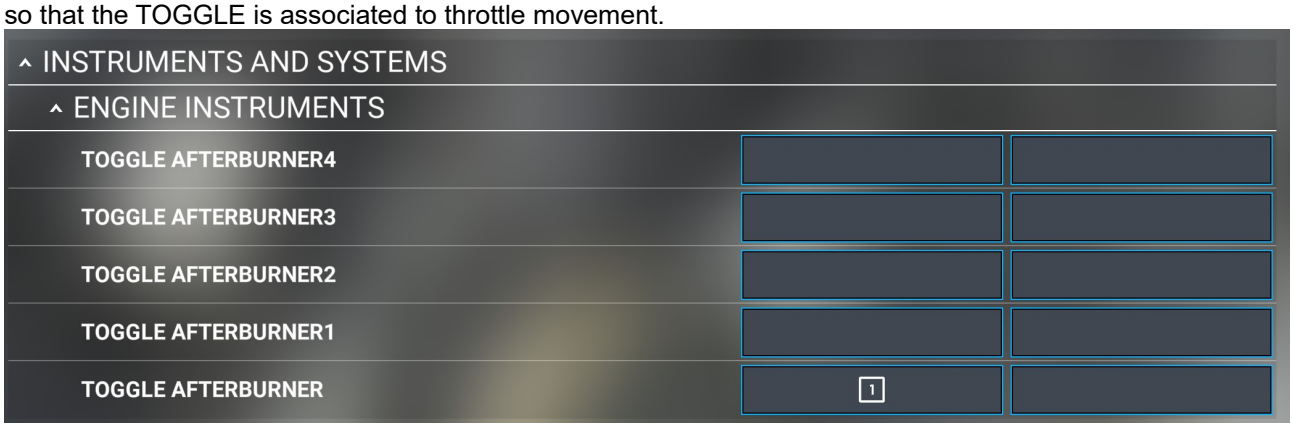

To shutdown the engines, there is a specific mouse interaction area located at the base of the throttle assembly – in order for this to work, throttles must be below idle.
Advancing the throttle to any other position will restore engine fuel flow and combustion.

IN-COCKPIT MENU

An in-cockpit menu can be accessed by clicking on the mouse area at the base of the HUD assembly shown in figure.

The menu is divided in 8 sections, which can be operated by clicking on them with the mouse.
Clicking on the centre of the menu will make it disappear (if it is the main menu selector) or will move to the upper level in the menu hierarchy. Using the mouse wheel on the menu centre will allow you to adjust the position of the menu within the cockpit. In cockpit menu can also be controlled via dedicated key bindings (see “ADDITIONAL KEY BINDINGS” section).

The menu items are divided as follows:

WSO CHECKLISTS -	Automatic execution of several WSO checklists.
NAVIGATION -	IN alignment, destination selection and waypoint management.
TACAN -	TACAN channel selection.
CRPMD -	CRPMD settings.
AFDS -	Autopilot modes and settings.
RADIOS AND IFF -	Radios and IFF operation.
CONFIGURATION -	Aircraft loadouts.
MAINTENANCE -	Maintenance and miscellaneous options.

WEAPONS AND LOADOUTS

Weapons, ECM pods and external fuel tanks can be configured in the menu, however they can also be applied individually in the WEIGHT AND LOADOUT sections.
NOTE: WEAPONS WILL ONLY SHOW ON NON-MARKETPLACE COPIES. IF YOU HAVE PURCHASED THE TORNADO FROM THE MARKETPLACE, YOU MAY WANT TO DOWNLOAD AND INSTALL THE INDIAFOXTECHO COMPANION PACKAGE: https://it.flightsim.to/file/66726/indiafoxtecho-companion-package
Available loadouts and token weights are as follows:

Fuel tanks:

FUEL TANKS* (1500l):	550 lbs (STA 2, 3, 5 and 6)
FUEL TANKS (2240l):	650 lbs (STA 2 and 6 only, GR.1 model only)

ECM pods:

BOZ (only STA 1 and 7):	630 lbs
CERBERUS (only STA 1):	440 lbs
SKY SHADOW (only STA 1):	485 lbs

Air to air:

SIDEWINDER (only STA2B and STA6B): 190 lbs

Air to ground:

AGM-88 HARM :	800 lbs (STA 3 and 5, ECR model only)
KORMORAN:	1370 lbs (STA 3 and 5)
MK.82:	1070 (STA 3 and 5, 2X); 515 (STA 4, 1X)
MK.82SE:	1090 (STA 3 and 5, 2X); 530 (STA 4, 1X)
MK.83:	2025 (STA 3 and 5, 2X); 1025 (STA 4, 1X)

NOTES:

* - underwing tanks are associated to EXTERNAL TANKS 1 and 2, under fuselage tanks are associated to LEFT AUX and RIGHT AUX tank - CENTERLINE TANK NOT SUPPORTED but associated to CENTER 1 tank). If the tanks are not loaded, the associated tank in the simulator will immediately zeroize).

EXTERNAL POWER UNIT

The Tornado is equipped with an APU that can be started with the on-board battery. However, in case the battery is depleted, an external power unit is also modelled. This can be activated via the game key bindings OR via the the in-cockpit menu. A 3D model is also included, courtesy of Heatblur Simulations, but must be enabled in the menu first.

External power unit will be automatically disabled if the plan is moving or not on the ground.

CONTROL STICK VISIBILITY

Control stick visibility can be toggled by clicking on the mouse area indicated in the figure below.

CREW GEAR, HELMET AND OXYGEN MASKS

On IDS and ECR model, player can select HGU-55P or HGU-55G, and MPU-12 or MPU-20 independently for the pilot and the WSO from the in-cockpit menu (MAIN MENU → MAINTENANCE → CREW GEAR). GR.1 has Mark 3 helmets only.

WEAPON SYSTEM OPERATOR VOICE MESSAGES AND AUTOMATION

Automatic execution of INITIAL CHECKS, INTERNAL CHECKS, PRE-TAXI CHECKS and SHUTDOWN CHECKS is provided from the in-cockpit menu dedicated section. The options will always appear but the WSO may refuse to execute them if proper conditions are not met – feedback on the execution is provided via voice messages and captions in the checklist menu.

The package includes a number of WSO voice messages, which can be controlled from the in-cockpit menu (MAIN MENU → OPTIONS → WSO VOICE and WSO VOICE OPTIONS).

The following voice messages are provided:

During takeoff:

- Rotation speed (dynamically calculated)
- Gear up
- Flaps up

During flight:

- Altitude messages (every 5k, 2k or 1k as preferred)
- Speed messages (every 100 or 50 knots)
- Fuel quantity (every 500Kg above 1000Kg and every 100Kg below 1000Kg)
- Low fuel warnings

During landing (when gear is extended when the aircraft is in flight):

- Speed warnings (too high or too low for landing)
- Radio altitude
- Comments for very hard or very smooth landings.

ADDITIONAL KEY BINDINGS

Additional key bindings are available on this aircraft:

SYSTEMS (*):

TOGGLE WATER RUDDER → left throttle movement (extends/preselects spoilers)

ANNUNCIATOR → extends/retracts the fuel probe

AVIONICS:

INCREASE ADF2 FREQUENCY (0.1) → TERRAIN FOLLOWING ENGAGE/DISEGNAGE

DECREASE ADF2 FREQUENCY (0.1) → HSI MODE SELECTOR

INCREASE ADF2 FREQUENCY (1) → INCREASE TFR RIDE HEIGHT

DECREASE ADF2 FREQUENCY (1) → DECREASE TFR RIDE HEIGHT

INCREASE ADF2 (10) → HUD VV/LOCKED SWITCH

DECREASE ADF2 (10) → HUD KCAS/MACH SWITCH

INCREASE ADF2 (100) → HUD RADIO/BARO SWITCH

DECREASE ADF2 (100) → HUD MAG/TRUE SWITCH

WSO MENU CONTROL (**):

INCREASE NAV3 (FRACT/CARRY) → INCREASE SELECTED OPTION NUMBER

DECREASE NAV3 (FRACT/CARRY) → DECREASE SELECTED OPTION NUMBER (***)

INCREASE NAV3 (WHOLE) → CONFIRM SELECTED OPTION

DECREASE NAV3 (WHOLE) → BACK TO PREVIOUS SCREEN

(*) The TOGGLE WATER RUDDER and ANNUNCIATOR key bindings are DISABLED by default, as they appear to have conflicts with some popular add-ons such as Airshow Assistant, and can be enabled from the in-cockpit menu: MAINTENANCE → OPTIONS → KEY BINDINGS.

(**) if the WSO menu is not visible, any of the associated

(***) there is a typo in the sim interface so that the event is labeled "increase"

PERMANENT VARIABLES

The following variables/preferences are saved after each flight:

- Particle Effects (enabled/disabled) - This can be changed in the in-cockpit menu. This option disables all particle-based special effects, as they can cause performance drop on some system.

- HGU55G or HGU55P preferences for pilot and WSO

- MBU-12 and MBU-20 preferences for pilot and WSO

- WSO voice preferences

- Position of the in-game menu

- Additional key bindings enabled/disabled

These variables are saved separately for IDS, GR.1 and ECR variants.

RADIO CHANNEL CONFIGURATION FILE

Radio presets are initialized by the VHF1Presets.xml file, which can be found in the following folder: SimObjects\Airplanes\IndiaFoxtEcho_TornadoIDS\panel\Presets

With a basic knowledge of XML code, the file can be edited with any text editor to change the radio channel presets.

LIST OF ABBREVIATIONS

A

A	Accept (symbol)
A;a	Angle of incidence
A/A	Air-to-Air
A/amps	Ampere
A/B	Airbrakes
A.C., AC, a.c.	Alternative Current
A/C	Aircraft
A/coll	Anti collision
A/G	Air-to-Ground
AAM	Air-to-Air Missile
AAMU	Air-to-Air Missile Unit
AAO	Air-to-Air Override Button
AAR	Air-to-Air Refueling
AAT	Air-to-Air Track Mode
ACC	Accumulator (hydraulic)
ACCEL	Acceleration, Accelerate
ACFC	Air-Cooled Fuel Cooler
ACPT, ACCPT	Accept
ACT	Actuator (hydraulic)
ACU	Automatic Control Unit
AD	Air Data
AD + SR	Air Data and SAHR Mode
ADC	Air Data Computer
ADC	Air Data Computing
ADD	Airstream Direction Detection
ADF	Automatic Direction Finder
ADI	Attitude Director Indicator
ADL	Armament Datum Line
ADR	Accident Data Recorder
ADS	Air Data System
AFDC	Autopilot and Flight Director Computer
AFDS	Automatic Flight Director System
AFP	Automatic Flight Plan
AGC	Automatic Gain Control
AGG	Air-to-Ground Guns
AGL	Above Ground Level
AGM	Air-to-Ground Missile
AGR	Air Ground Ranging
AGTY	Agility
AICP	Air Intake Control Panel
AICS	Air Intake Control System
AIM	Air Intercept Missile
Aj	Area, jetpipe (nozzle area)
ALN	Align
ALT	Altitude
ALT/ALTER	Alternative
AM	Airmix (02 regulator)
AMPL	Amplifier
AMSL	Above Mean Sea Level Antenna
ANT	Antenna
AOA	Angle of Attack
AP	Autopilot
AP ENG	Autopilot Engage
AP MON	Autopilot Monitoring
APFD	Autopilot Flight Director
app., approx	Approximate, approximately
APP/APRCH	Approach
APPR. APPROX	Approximate, approximately
APU	Auxiliary Power Unit
ARB	Attack Release Button
ARI	Attitude Repeater Indicator
ARU	Airfoil Release Unit
ASAP	As Soon As Possible
ASI	Airspeed Indicator
ASM	Air System Master
ASO	Automatic Steering Override
AT	Autothrottle
ATC	Air Traffic Control
ATTD	Attitude
ATTK	Attack
ATU	Antenna Tuning Unit
AUTO	Automatic
AUTO P	Autopilot
AWFL	Air Worthiness Flight Limitation

B

B	Brilliance
B SCN	B Scan
B/B	Buddy/Buddy
BAA	Best Available Altitude Barometric
BARO	Barometric
BARO IN	Barometric Inertial Height
BATH	Best Available True Heading
BATT	Battery
BATT MSTR	Battery Master (switch)
BCN	Beacon
BDHI	Bearing Distance and Heading Indicator
BITE	Built-In Test Equipment
BOV	Blow Off Valve
BRG	Bearing
BRSL	Bomb Release Safety Lock
BRST	Boresight
BRT	Bright, brightness

C

C	Celsius
C	Compatible
C/FUS	Centre Fuselage (tank)
CAL	Calibration, calibrate
CAS	Calibrated Airspeed
CAT	Clear Air Turbulence
CBLS	Carrier Bomb Light Store
CCE	Communications Control Equipment
CCIL	Continuously Computed Impact Line
CCIP	Continuously Computed Impact Point
CCP	Communication Control Panel
CCS	Communication Control System
CCU	Central Control Unit (FTI)
CFS	Control Frequency Selector
CG	Centre of Gravity
CHAN	Channel
CLPU	Closed Loop Pull Up
CMD TRK	Command Track
CMO	Contour Mapping ON
CMP	Central Maintenance Panel
CMPTR	Computer
COMP	Compass Mode
CON	Console
CONFIG	Configuration

CONT INV	Contrast Inversion
CONT.D	Continued
CONT, contr	Control
CONV	Converter
CO2	Carbon Dioxide
CP	Control Panel
CPCV	Cabin Pressure Control Valve
CPGS	Cassette Preparation Ground Station
CPU	Central Processing Unit
CR	Crash Recorder
CSAS	Command and Stability Augmentation System
CSD	Constant Speed Drive
CSI	Combined Speed Indicator
CTR	Center
CU	Control Unit
CUE	Control Unit Electronic
CURS	Cursors
CVO	Cancel Visual Offset
CVR	Cockpit Voice Recorder
CWP	Central Warning Panel
CWS	Central Warning System

D

D.C., DC, d.c.	Direct Current
D/N	Day/Night (Switch)
DAMP	Damper, damping
DAU	Data Acquisition Unit
dB	Decibel
DCP	Doppler Control Panel
DEC	Declination
DEC	Decrease
DECU	Digital Engine Control Unit
Deg/sec	Degrees/Seconds
DEL	Delete
DEP	Depression
DEST	Destination
DEST, D	Destination
DF	Direct Finding
DIFF	Differential
DIM	Dimmer
DIR	Direct
DIS	Display
DIS, DIST	Distance
DL	Direct Link
DN	Down
DME	Distance Measuring Equipment
DP +SR	Doppler + SAHR Mode
DPPLR, DPLR	Doppler
DR	Director
DR	Drift
DSC	Digital Scan Converter
DTG	Distance to Go
DU	Display Unit
DWN	Down
DYN	Dynamic

E

E	East
E	Empty
EAS	Equivalent Air Speed
ECM	Electronic Counter Measures
ECP	Engine Control Panel
ECS	Environmental Control System
EED	Electro Explosive Devices
EFH	Estimated Flight Hours
EGTF	Enhanced Ground Test Facility
EHP	Emergency Hydraulic Pump
ELEV	Elevation
ELPC	Electric Low-Pressure Controller
EMER.EMERG.	Emergency
EMERG RAM AIR	Emergency Ram Air
EMERG TRANS	Emergency Transfer
EMGY	Emergency
ENC	Emergency Nozzle Closure
ENG	Engine
ENT	Enter
EPS	Emergency Power System
EPSC	Electric Power System Controller
EQM	Equipment Format
ERA	Emergency Ram Air
ERR	Error
ERU	Ejection Release Unit
ES	E-Scope
ESRRD	E-Scope Radar Repeater Display
EU	Electronics Unit
EXT	Extended
EXT	Extinguisher

F

F	Filter
F	Fire
F	Front
F	Full
F/C	Front Cockpit
F/R pump	Front/Rear Pump
FA, F/A	Fix Attack
FAF	Final Approach Fixpoint
FAIL	Failure
FCU	Fuel Control Unit
FD	Flight Director
FES	Fast Erection Synchronization
FFK	Fixed Function Keyboard
FIX	Fixing
FKPT	Fixpoint
FL	Flap
FLT	Flight
FLT INS	Flight Instruments
FLT PLN	Flight Plan
FLW	Follow
FM	Frequency Modulation
FOD	Foreign Object Damage
Form	Formation
FPS	Frame Per Second
FR VLV	Flight Refueling Valve
FREQ	Frequency
FREQ AGTY	Frequency Agility
FRIG	Frequency Response Input Generator
Frz	Freeze
FS	Frequency Sweep
Ft/min	Feet per Minute
FT, ft	Feet
FTI	Flight Test Instrumentation

FUS	Fuselage
FW, FWD	Forward
G	
G	Gain
G	Guard (channel)
G, g	(Unit of) gravity
GCA	Ground Controlled Approach
GCU	Generator Control Unit
GEN	Generator
GEU	Gun Electronics Unit
GEU	Gyro and Electronics Unit
GLU	Ground Loader Unit
GMR	Ground Mapping Radar
GND ACT	Ground Activation
GPCU	Ground Power Control Unit
GRID	Grid Data
GS, G/S	Ground Speed
GTF	Ground Test Facility
GVNR	Governor
H	
H	Height
H	Horizontal
HAS	Hardened Aircraft Shelters
HDD	Head Down Display Recorder
HDG	Heading
HDG/DR	Heading/ Drift
HE	High Energy
HF	High Frequency
HF/SSB	High Frequency Single Sideband
HI	High
HIRTA	High Intensity Radio Transmission Area
HLWSC	High Lift and Wing Sweep Control Assembly
HOJ	Home-on-Jam
HP	High Pressure
HP SOC	High Pressure Shut-Off Cock
HSI	Horizontal Situation Indicator Height
HT	Height
HT FIND	Height Finding
HT Fix	Height Fixing
HTR	Heater
HUD	Head-Up Display
HYD	Hydraulic
Hz	Hertz (cycles per second)
I	
I	Inertial Navigator (Symbol)
I/BD	Inboard
I/C	Intercommunication
IAS	Indicated Airspeed
IC	Incompatible
ICO	Instinctive Cut-Out
IDG	Integrated Drive and Generator
IF	Immediate Frequency
IFD	In-Flight Display
IFF	Identification Friend or Foe
IFF/SIF	Identification Friend or Foe/Selective Identification Feature
IFM	In-Flight Monitor
IFR	Instrumental Flight Rules
IFU	Interface Unit
IGNSEL	Ignition Selective (switch)
ILS	Instrument Landing System
IMC	Instrumental Meteorological Condition
IMCP	Intake Manual Control Panel
IN	Inertial Navigation
INBD	Inboard
INC	Inclination
INC	Increase
INCDU	Inertial Navigator Control and Display Unit
IND	Indicator
INSR	Insert
INST	Instrument
INT	Intelligence point
INT	Intercommunication
INT	Intermittent
INT	Internal
INT	Interval
INTER	Interconnect
IP	Intermediate Pressure
IP BOV	Intermediate Pressure Blow-Off Valve
IPI	Initial Position Insertion
IPP	Initial Present Position
ISA	International Standard Atmosphere
K	
K	Kilo (1000 Units)
K	Knots
K	Kormoran Missile
K	Scaling Stage
KCAS	Knot Calibrated Airspeed
KF	Kalman Filter
Kg/min	Kilogrammes per Minute
KG, kg	Kilogramme
Khz	Kilohertz (kilocycles per second)
KIAS	Knots Indicated Air Speed
Km	Kilometer
KN, kN	Kilo Newton
kPa-	Kilo Pascal
KT, kt	Knots
KTS, kts	Knots
KVA	Kilo Volt Ampere
KW	Kilo Watts
L	
L	Left
L	Limitation
lb	Pound
LCK ON	Lock-On
LCN	Load Classification Number
LCP	Laser Control Panel
LD	Lift Dump
LE	Leading Edge
LED	Light Emitting Diodes
LF	Left/ Forward
LFD	Longitudinal Fuselage Datum
LG	Landing Gear

LH (L.H.)	Left Hand
LHW	Low Height Warning
LIM	Limiter
LIN	Linear
LIS	Lock-in-Surge
LK AHD	Look Ahead Mode
LL	Light Weight in Loft Attack
LOC	Localizer
LOG	Logarithm
LOS	Line of Sight
LOX	Liquid Oxygen
LP	Low Pressure
LPC	Low Pressure Controller
LRF	Laser Range Finder
LRU	Line Replacement Unit

M

M	Mach (number)
M	Magnetic
M	Mapping
m	Meters
M + RS	Map and Radar Standby
MAC	Mean Aerodynamic Cord
MACE	Minimum Area Crutch-less Ejector
MAG	Magnetic Heading
MAIN	Main Mode
MALF	Malfunction
MAN	Manual
MAP	Mapping
MASS	Master Armament Safety Switch
MAX., max	Maximum
MB SET	Millibar Setting
MB/mb	Millibar
MC	Main Computer
MCCP	Main Computer Control Panel
MCD	Magnetic Chip Detector
MCP	Mode Control Panel
MCST	Main Computer Self-Test
MD	Manoeuvre Demand
MDC	Micro Detonating Cords
MDU	Magnetic Detector Unit
MEAS	Measurement
MECH	Mechanical
MECU	Main Electronic Control Unit
MED	Medium
MEM HDG	Memorized Heading
MFCU	Main Fuel Control Unit
MFK	Multi Functional Keyboard
MFLS	Mode and Failure Logic System
MFP	Manual Flight Plan
MHz	Megahertz (megacycles per second)
MI	Magnetic Indicator
MIC	Microphone
MID	Middle, intermediate
MIN, min	Minute
MINS	Minutes
Mk	Mark
MKR	Marker
ML	Medium Weight in Loft Attack
MLG	Main Landing Gear
mm	Millimeter
MMV	Main Metering Valve
MNVR	Manoeuvre
MON	Monitoring
MOT	Motor
MRAD	Milliradiant
MRCP	Mapping Radar Control Panel
MRI	Monopulse Resolution Improvement
MS/MTR	Milliseconds/Meter
M sec	Milliseconds
MSL	Mean Sea Level
MSL	Missile
MSTR	Master
MTR	Marked Target Receiver
mtr	Meter
MVG	Moving
MVR	Maneuver
MVT	Moving Target
MWCA	Multi Weapon Carriage Adapter
MWCS	Multi Weapon Carriage System

N

N	Navigator
N	Newton
N	Normal
N	North
NA	Not Applicable
NAV	Navigation
NE	Never Exceed Limit
NFX	Next Fixpoint
NG	Nose Gear
NH	High pressure rotor speed
NHC	Navigator's Hand Controller
NI	Intermediate pressure rotor speed
NL	Low pressure rotor speed
NLG	Nose Landing Gear
NM/kg	Nautical Miles per Kilogramme
NM, N MILES	Nautical Miles
NMCP	Navigation Mode Control Panel
NML,NORM,NRM	Normal
No.	Number
NRV	Non-Return Valve (check valve)
NSAS	Nosewheel Augmentation System
NTH	North
NTH UP	North Up Mode
NWAMS	Navigator's WANTS
NWS	Nose Wheel Steering
N3	Hight Pressure Rotor Speed

O

O	On-Top (Symbol)
O RIDE, O/R	Override
OAT	Outside Air Temperature
OB	Outboard
OBS	Omni Bearing Selector
OBST	Obstruction
OCAMS	On-Board Checkout and Monitoring Sub-System
OFP	Operational Flight Program
OFS	Offset
OHEAT	Overheating
OL	Oleo
OLPU	Open Loop Pull Up

OTF	On-Top Fix
OUTBD	Outboard
OXY	Oxygen
P	
P	Parking
P	Pilot
P	Pitch (axis)
P	Pitot pressure
P	Position Transducer
P	Pressure
P/R	Pitch/Roll
P/R MD	Pitch/Roll Maneuver Demand
Pa	Pascal
PA	Power·Amplifier
PAR	Precision Approach Radar
PCU	Power Control Unit
POL	Pitch Direct Link
PDR	Pressure Drop Regulator
POU	Pilot's Demand Unit
POU	Pilot's Display Unit
PE	Pressure Error
PEC	Personal Equipment Connector
PERSIST	Persistance
PEZ	Compressor Outlet Pressure
PFCS	Primary Flight Control System
PFX	Plan Fixing
PHC	Pilot's Hand Controller
PIO	Pilot Induced Oscillation
PL	Projection Lamp
PLB	Personal Locator Beacon
PLN	Plan
PMD	Projected Map Display
PN	Part Number
POS, PPSN	Position
PP	DC bus
PP	Present Position
PPI	Plan Position Indicator
PPI	Present Position Indicator
PRE FLT	Preflight
PRE FLT CHK	Preflight Check
PRF	Pulse Repetition frequency
Ps	Static Pressure
PSI	Pounds per Square Inch
Pso	Free Stream Static Pressure
PSP	Personal Survival Pack
PSU	Program Storage Unit
Pt	Total Pressure
PTO	Power Takeoff
PTT	Press-to-Transmit
Pt2	Total Pressure, HP Compressor
PWAMS	Pilot's WAMS
Q	
q	Reduction in Pitch Stick force
QFE	Barometric Pressure at Airfield Level
QfN	Qualification
QNH	Barometric Pressure at Sea Level
QRB	Quick Release Box
QRF	Quick Release Fitting
QUAD	Quadruplex
QUAD ACT	Quadruplex Actuator
R	
R	Radar (Symbol + Read-out)
R	Rear
R	Rejected
R	Repeat
R	Right
R	Roll (axis)
R/B	Range and Bearing
R/C	Rear/Cockpit
R/E	Receiver/Exciter
RA	Radar Altimeter
RAD	Radio
RAD ALT, RALT	Radar Altimeter
RADAR	Radio Detection and Ranging
Rain disp	Rain dispersal
RAT	Ram Air Turbine
RCL	Recall
RCN	Reconnaissance
RCOV	Recirculation Change-Over Valve
RCV	Receive
RCV/XMT	Receive-Transmit
ROE	Rapid Data Entry
RDL	Reference Designation Letter
RDR	Radar
RDU	Radar Display Unit
ROY	Ready
REC	Receive
REC, RECDR	Recorder
Recce	Reconnaissance
RECORD	Recorder
RESD	Reserve Destination
REV	Reverse
REVN	Reversionary
Rf	Radio Frequency
RFCI	Remote frequency Channel Indicator
RH	Radar Height
RH (R.H.)	Right Hand
RHFCU	Reheat Fuel Control Unit
RHH	Radar Height Hold
RHT	Reheat
RKB	Reversionary Keyboard
RN	Random Noise
ROL	Read-Out Line
RPO	Rapid
RPD HTR	Rapid Heater
RPM	Revolution per Minute
RPMD	Repeater Projected Map Display
RPTR	Repeater
RT, rt	Right
RTE	Route
RTO	Refused Takeoff (Rejected Takeoff)
RWE	Radar Warning Equipment
RWR	Radar Warning Receiver
RX	Receiver
S	
S	Scavenge pump
S	South
S	Static Pressure

S-S	Scan-to-Scan
SAHR	Secondary Attitude and Heading Reference
SAS	Stability Augmentation System
SBS	Standby-Sight
SBY, STBY, STDBY	Standby
SCAN CONV	Scan Converter
SCANC	Scanning Valve
SCH	Set Clearance Height
SCSAB	Signal Conditioning Switching and Amplification Boxes
SEC, sec	Second
SEL	Selector /Selected
SETAC	Sector TACAN
SHLDR	Shoulder
SIM	Simulation
SL	Sea Level
SLOE	Slide
SLYE	Slave
SLW, SL	Slew
SMS	Store Management System
sac	Shut-off Cock
SPD	Speed
SPILS	Spin Prevention and Incidence Limiting System
SPOIL	Spoiler
SPS	Secondary Power System
SPWA	Special Weapon A Bus
SPWB	Special Weapon B Bus
S-S	Scan-to-Scan
SS	Single Shot
SS	Software Series
SSB	Single Side Band
SSR	Secondary Surveillance Radar
STAB	Stability (augmentation)
STB	Stabilized
STBY, STDBY	Standby
STC	Sensivity Time Control
STD	Standard
STWI	Specific Threat Warning Indications
SYNC, SYN	Synchronize/Synchronization
SYS., SYST	System

T

T	Tacan (Symbol)
T	Temperature
T	Test
T.O. T/O	Takeoff
T/R	Transmit/Receiver
TA	Terrain Avoidance (CMO)
TACAN, TAC	Tactical Air Navigation (system)
TAIL	Taileron
TAS	True Airspeed
TASH	True Airspeed, Horizontal
TBT	Turbine Blade Temperature
TE	Trailing Edge
TEL	Telephone
TEL	Time Early/Late
TEMP	Temperature
TF	Terrain Following
TF MON	Terrain Following Monitoring
TFC	Terrain Following Computer
TFR	Terrain Following Radar
TGT	Target
TGT	Turbine Gas Temperature
TH	True Heading
THROT	Throttle
TOO	Target of Opportunity
TOT	Time Over Target
TP	Tail Plane
TR	Thrust Reverse
TRAIN	Training (mode)
TRANS	Transfer (fuel)
TRK	Track
TRK ERR	Track Angle Error
TRU	Transformer Rectifier Unit
TTU	Triplex Transducer Unit
TT1	Total Inlet Temperature
TUP	Turbo Union Publication
TV	Television
TV/TAB	TV/Tabular Display
TVM	Television Guided Missile
T1	Intake Temperature

U

U/C	Undercarriage
U/FUS	Under Fuselage (tank)
U/L	Unlocked
U/WING, U/WG	Under Wing (tank)
UHF	Ultra-High Frequency
UP	Upper
UTIL	Utilities (hydraulic)
UTM	Universal Transversal Mercator System

V

V	Speed
V	Visual (Symbol)
V	Volt
VDC	Volts Direct Current
V/UHF	Very High and Ultra High Frequency
VAB	Lift Off Speed
VAR	Variation
VAS	Voice Actuated Switch
VCP	Vapor Core Pump
VEL	Velocity
VERT	Vertical
VHF	Very High Frequency
VIB	Vibration
VMC	Visual Meteorological Conditions
VMO	Variable Metering Orifice
VOL	Volume
VOR	VHF Omnidirectional radio Range
VOS	Voice Operated Switch
VOT/MON	Voter- Monitor
VRP	Visual Flight Rules
VROT	Rotation Speed
Vs	Stall speed
VSI	Vertical Speed Indicator
VSTALL	Stall speed
VTO	Takeoff speed
VV	Velocity Vector
VV	Vertical Velocity

W		WS, W/S	Windscreen
W	West	X	
W/S demist	Wind Screen Demist		
W/V	Wind Direction/Velocity	X	Roll Axis
WJ\MS	Weapon Aiming Mode Selector	X DRIVE	Cross Drive
WCP	Weapon Control Panel	XTRK	Across Track
WFG	Waveform Generator	X-Feed	Cross Feed
WG	Wing	XP	AC bus
WOG	Weight On Ground		
WPT	Waypoint	Y	
WPU	Weapon Programming Unit	Y	Yaw (axis)
WRB	Weapon Release Button		
WRNG	Warning	Z	
WS	Wing Sweep	Z	Yaw (Axis)
WS	Working Store	ZCL	Zero Command Line

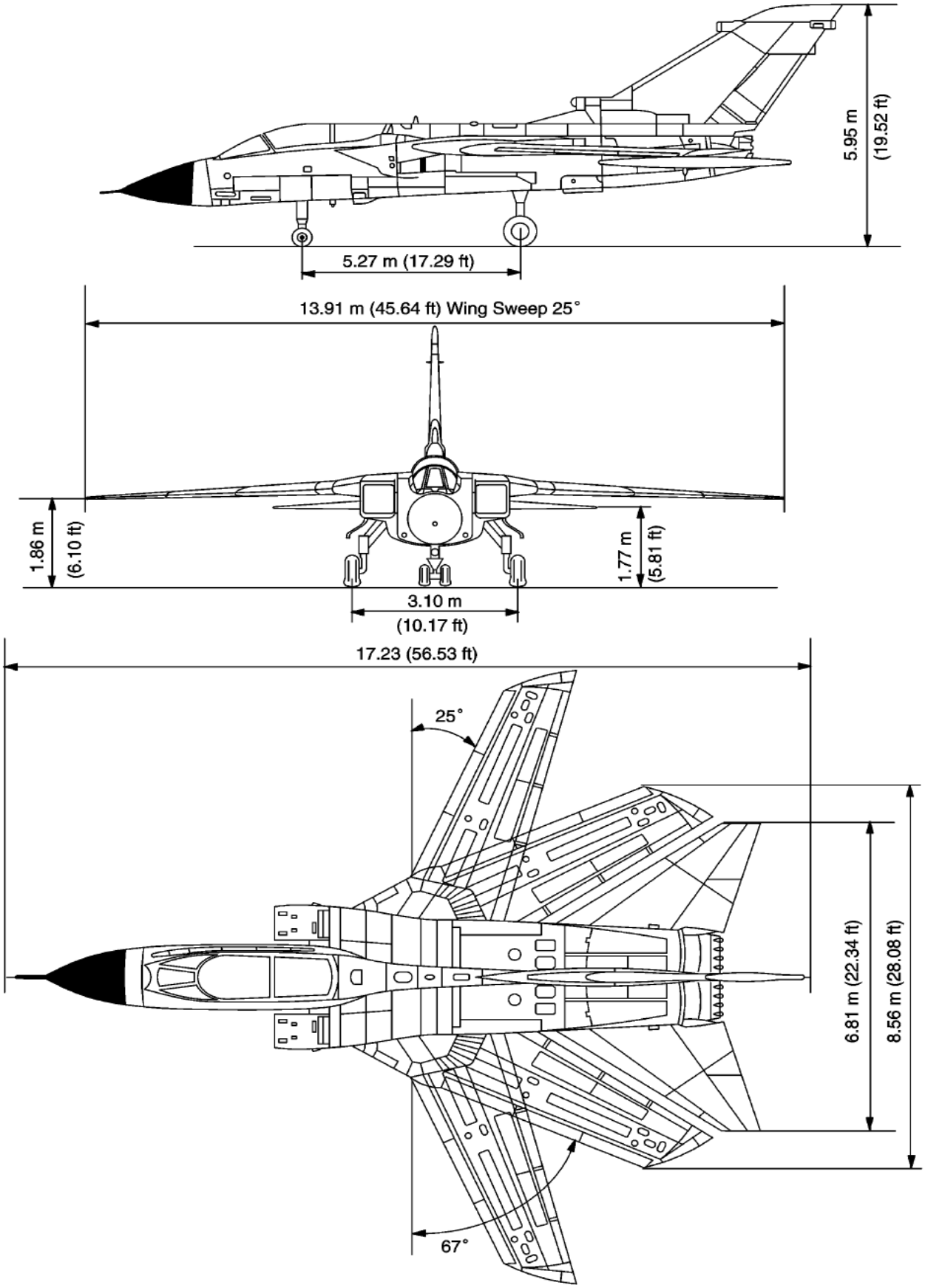
5.95 m
(19.52 ft)
5.27 m (17.29 ft)
13.91 m (45.64 ft) Wing Sweep 25°
1.86 m
(6.10 ft)
1.77 m
(5.81 ft)
3.10 m
(10.17 ft)
17.23 (56.53 ft)
25°
6.81 m (22.34 ft)
8.56 m (28.08 ft)
67°

SECTION I
DESCRIPTION AND OPERATION

THE AIRCRAFT

The TORNADO Multi-Role Combat Aircraft (MRCA) is a two place (tandem), land-based, all-weather supersonic long range fighter bomber. The primary mission of the aircraft is high-speed low-level attack with various offensive and defensive capabilities. Mission capabilities include: long range high altitude intercepts utilizing air-to-air missiles and/or guns; long range attack missions utilizing conventional weapons as primary armament and close support missions utilizing a choice of missiles, bombs, other external stores, and two guns. An automatic low altitude terrain following system enhances penetration capability. Power is provided by two RB199-34R axial-flow, three-spool. Turbofan engines equipped with afterburners and thrust reversers. Air is supplied to the engines through variable-geometry intakes which match air flow to engine demand. Each engine provides a drive to an associated accessories gearbox; the two gearboxes can be interconnected (X-drive). An Auxiliary Power Unit (APU) also provides a drive to the right gearbox and can thus drive all accessories and provides engine starting. The APU cannot be used in flight. In the event of a double engine flame-out or double generator failure an Emergency Power System (EPS) can supply, for a limited. period, hydraulic pressure for limited rate taileron operation and DC power to an emergency fuel pump to allow in-flight relight of the right engine.
The aircraft is fitted with cantilever shoulder wing and a conventional rudder and taileron. Wing sweepback is variable in flight or on the ground by manual control; any sweep angle between 25° and 67° may be selected. Forward wing sweep provides take-off and landing capabilities at minimum speed. For all other regimes the wings are manually swept in accordance with desired Mach number and mission phase. This feature provides the aircraft with a highly versatile operating envelope.
Primary flight controls consist of two tailerons which are moved symmetrically for pitch control and differentially for roll control, and a conventional rudder for yaw control. Roll control at lower airspeeds is supplemented by two sets of wing spoilers: during the landing ground roll the two spoilers can operate as lift dumpers. ‘These controls are normally operated through a Command and Stability Augmentation System (CSAS). ‘The CSAS is a triplex “fly-by-wire” system which process pilot’s demands autopilot commands into stabilized electrical signals. These signals command hydraulically powered control units which drive the control surfaces. Lift augmentation for take-off and landing is provided by the following high-lift devices: full-span leading edge slats, full-span double slotted trailing edge flaps, and krueger flaps on the leading edge of the fixed portion of each wing i.e. “wing nib”. Fuel is carried in fuselage tanks, integral wing tanks, and jettisonable external tanks. Fuel system operation is normally automatic but can be sequenced manually if desired. The aircraft is fitted with an in-flight refueling facility through an extendible refueling probe. On the ground it may be refueled either by single point or by gravity.
Electrical power is provided by two AC generators driven at constant speed, each driven from each accessory gearbox and feeding separate but normally interconnected busbars.
A Transformer-Rectifier Unit (TRU) is supplied from each of the two main AC busbars, each TRU feeding DC at 28 volts to an associated busbar. Both TRU also feed a third DC busbar. An AC-fed battery charger provides charging current and, power support to a busbar supplied directly from the air-craft battery. Two separate and independent systems supply hydraulic power to primary flying controls, via protected circuits and aircraft utilities; each pump is driven independently by each gearbox and supplies pressure to one system only.
Landing gear extension and retraction is hydraulically powered; in an emergency the gear can be extended by use of nitrogen pressure. Wheel brakes and nose wheel steering are also hydraulically powered. The nose wheel steering system incorporates yaw augmentation when asymmetric loads occur.
Bleed air tapped from the 4th stage of each engine HP compressor is cooled and fed to the cabin, equipment compartment, canopy scaling, wing slot seals and nose radar. This provides cabin conditioning and pressurization, cooling air for the equipment compartments and nose radar, and pressurization of the wing slot seals and radar waveguide.
If system failure occurs, ram air can be fed into the cabin and cooling air supplied to the equipment compartments by electric fans. Engine intake ice protection is assured by electrically heated mats, the windscreen and sensor probes are also heated. The windscreen is also equipped with a washing system.
A centralized warning system is installed to warn the crew of failures arising at critical points in the aircraft systems. Initial warnings are audio/visual or visual only, in order to attract the crew members attention to the appropriate caption on the central warning panel.
The integrated navigation and weapon aiming system uses a digital Main Computer (MC) to process data from navigation sensor, forward looking sensors and a number of navigation and weapon aiming controls. The outputs from the MC are used to provide displays of navigation, steering and weapon aiming data to the crew. The steering data is also used by the Autopilot and Flight Director System (AFDS) to provide an automatic route following capability.
The communications radio installation includes a main V/UHF transmitter-receiver, an emergency UHF

transmitter-receiver and a HF transmitter-receiver. A telebriefing facility is provided and a Cockpit Voice Recorder (CVR) is fitted. The complete installation, including audio warnings, is integrated by a Communication Control System (CCS). IFF is also fitted. Radio navigation aids include Tacan.
A wide range of external stores may be carried on underfuselage and underwing pylons; outboard wing pylons normally carry ECM pods. Underwing pylons are constantly kept aligned with the fuselage longitudinal datum by a swivel mechanism.

AIRCRAFT DIMENSIONS

Length (overall including pitot static boom)	17.23 m
Wingspan swept fully forward	13.91 m
Wingspan swept fully aft	8.52 m
Height (to top of vertical fin)	5.95 m
Distance between main landing gear wheels	3.10 m

AIRCRAFT GROSS MASS

The approx., average gross masses are as follows:

Operating mass	14000 kg
Operating mass plus a full internal fuel load	18700 kg
Operating mass plus a full internal fuel load plus two externals wing tanks	21550kg

FLIGHT CREW

The flight crew consists of an aircraft commander (AC) and a Weapon System Operator (WSO) seated in tandem.

ENGINES

The aircraft is powered by two TURBO UNION RB199 MK101 and Post mod. 01431: MK103, twelve compressor stages three-spool axial flow turbofan engines, equipped with reheat and thrust reverser. The engines are mounted side by side in the lower section of the rear fuselage and are inter-changeable. The sea level, standard day uninstalled thrust rating of the engine is in the 39kN (8500 pounds) class and 68kN (15000 pounds) class with reheat in operation. Provision is made for starting the engines with an auxiliary power unit (APU), mounted on the gearbox of the right engine. Electrical power for the engine igniter plugs is supplied by two high energy ignition units. Each engine is supplied with an airflow through a separate inlet duct located below the intersection of the wing and fuselage. An automatic controlled movable ramp is used in each inlet duct to control air flow to the engines. Additional engine inlet air is provided during ground, take-off and a low-speed high-power operation, through two auxiliary inward opening intake doors located in the outboard side of the nacelle. These features allow optimum engine performance through a wide range of airplane operating conditions. Air for each engine is routed through a single duct for both the basic engine and fan section. The airflow from the fan divides into two streams, the hot main stream and the cold by-pass flow. The by-pass air flows through the annular duct surrounding the intermediate pressure (IP) and the high pressure (HIP) compressors, the combustion chamber and the turbine section, to rejoin the main flow through a colander in the jet pipe.
The core stream flows from the inner portion of the fan, through the IP and HIP compressor to the annular combustion chamber, where a controlled quantity of fuel is added to the air and the mixture ignited by two igniter plugs. The gas is expanded through the turbine to the jet pipe where the hot gas mixes with the cold by-pass stream. The turbine section of the engine consists of a single stage turbine, to drive the six-stage high pressure compressor, an intermediate single stage turbine to drive the three intermediate pressure compressor, and a two stage turbine to drive the three stage low pressure (LP) compressor. The turbines are mechanically in-dependent of each other.
High and low pressure compressor speed is indicated by individual tachometers as a percentage of nominal maximum RPM. A red and black striped failure flag covers the digital display in the event of a system malfunction, power failure, or is switched off.
During reheat operation, fuel is added to the hot gas stream in the exhaust section by:

- a primary flow introduced through the vaporizers.
- a gutter ring flow introduced through fuel spray rings.

The by-pass stream is injected with fuel through jets between the radial fingers of the reverse colander. The area of the nozzle is fully variable in the reheat condition and is held in a nominal nozzle area position throughout the dry range. To reduce engine thrust for taxing purposes, the nozzle may be fully opened by operating a separate TAXI NOZZLE lever. The throttle movement is then restricted to below MAX DRY (approx. 72% NH).
A bucket type thrust reverser is located at the rear of each jet pipe to reduce aircraft landing distance. The system operates only when the aircraft weight is on the ground. Pilot's throttle lever interlocks prevent simultaneous selection of the reheat and thrust reverser.
The engine system covers the following items:

- Engine air system
- Engine air intake
- Engine oil system
- Engine fuel control system
- Engine reheat system
- Engine variable nozzle system
- Engine ignition and relight system
- Engine starting system
- Engine thrust reversal system
- Throttles
- Engine instruments and controls
- Engine overheat and fire detection system
- Engine fire extinguisher system

MK-101 ENGINE – ENGINE PRINCIPAL FEATURES

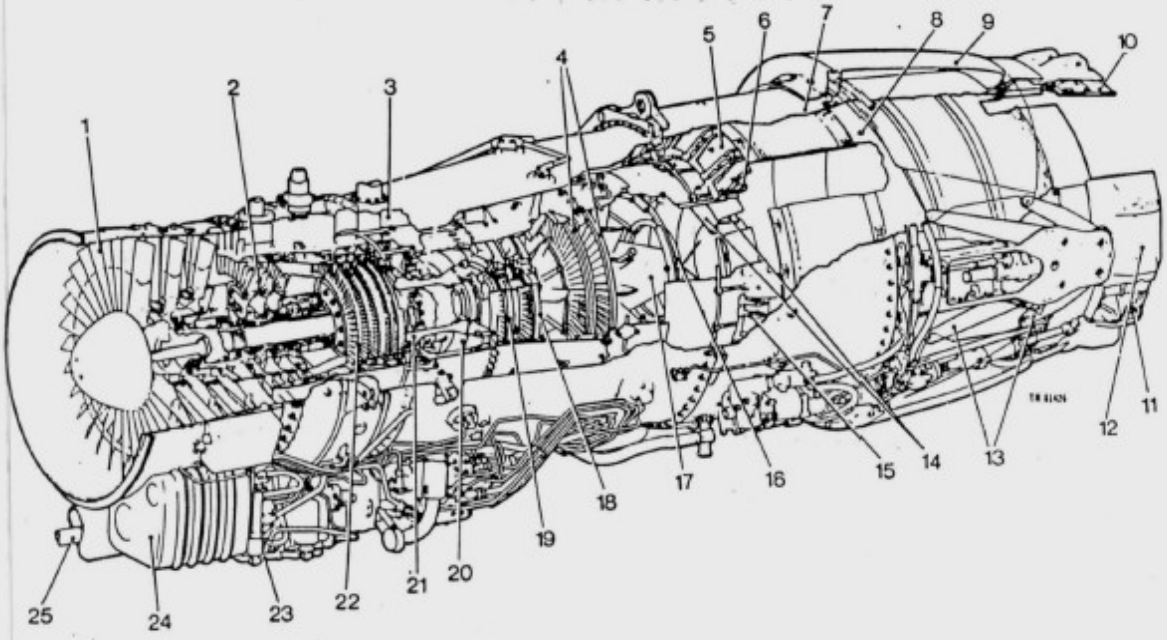

1	LP COMPRESSOR (FAN)	14	REHEAT FLAMEHOLDERS
2	IP COMPRESSOR	15	BY-PASS STREAM REHEAT FUEL SPRAYS
3	BY-PASS DUCT	16	FLAMEHOLDER RING
4	LP TURBINE	17	EXHAUST DIFFUSER
5	BY-PASS	18	IP TURBINE
6	PRIMARY VAPOURIZER	19	HP TURBINE
7	JET PIPE	20	FLAME TUBE
8	JET PIPE HEATSHIELD	21	COMBUSTION CHAMBER
9	THRUST REVERSER BUCKET	22	HP COMPRESSOR
10	PROPELLING NOZZLE FLAP	23	EXTERNAL GEARBOX
11	SHROUD ROLLER	24	OIL TANK
12	PROPELLING NOZZLE SHROUD	25	PTO SHAFT
13	THRUST REVERSER LINKS		

NOTE for Microsoft Flight Simulator:

In the MSFS rendition, the engine is simulated using the default jet engine implementation. Due to the peculiar features of the Tornado engine system, minor differences in engine parameters (including NL, NH and temperatures) may occur Also, many of the details in this section do not apply to the game, but are reported in this manual for information and educational purposes.

AIR SYSTEM BLEED SOURCES AND UTILIZATION

Air bleed from the compressor stages supplies the following aircraft and engine services:

LP compressor delivery air:	Fuel tank pressurization, external fuel tanks transfer
IP compressor delivery air:	IP BOC, pressurization of bearing chambers, IP compressor balancing chamber, air mixture chamber, main fuel control unit
HP compressor third stage air:	HP turbine stator and rotor cooling, LP turbine stator cooling, air mixture chamber, pyrometer lens purging
HP compressor fourth stage air:	Aircraft services (ECS), HP4 bleed valve, variable nozzle air motor
HP compressor delivery air:	IP BOV, turbine pressure ratio transducer, Main fuel control unit, reheat fuel control unit, thrust reverser air motor, HP6 bleed pressure regulating valve to aircraft fuel cooling system, HP stator and rotor cooling, IP turbine rotor disc cooling, air mixture chamber

IP Blow-Off Valve (IP BOV)

When the IP BOV is opened, a part of the IP compressor air is dumped into the by-pass duct. This moves the [P compressor working line away from the surge line thereby improving the surge margin. The control unit electronic (CUE) controls the operation of the IP blow-off valves, which will open when one of the following conditions exists:

- NH is below 80%
- NH deceleration >2.5%/sec (with a 2 sec closing delay)
- The gun firing trigger is pressed
- And as a function of free stream total pressure and X-drive clutch position

HP4 Bleed Air

HP4 bleed air is used for the environmental control system (ECS). Normally each engine will supply half of the aircraft required bleed flow for the ECS. If the HP4 delivery pressure differs by a certain amount between the engines (staggered throttle setting different acceleration characteristics) the higher-pressure engine will supply the whole bleed flow.

HP6 Blow-Off Valve (HP6BOV)

When the HP6 BOV is opened, a part of the HP compressor air is dumped into the by-pass duct. The valve is opened by the CUE when:

- NH deceleration > 1%/sec and the free stream total pressure is less than 30 kP
- The gun firing trigger is pressed
- And as a function of free stream total pressure and X-drive clutch position i.e. when Pto < 27kPa with X-drive not engaged, and when Pto <28 kPa with X-drive engaged.

ENGINE AIR INTAKES

System Description

The variable area intakes match air mass flow to engine demand and flight conditions in supersonic flight. Intake area is determined by movable ramps, which are operated by the Air Intake Control System (AICS). Two auxiliary, spring-loaded, inward opening intake doors are provided for ground, take-off, and low-speed high-power operation. The AICS consists of an Automatic Control Unit (ACU), and an electro-hydraulic ramp actuator for each air intake, and a common Air Intake Control Panel (AICP) on the front cockpit right console. Each ACU receives inputs from its associated side pitot probe, side static vent, AOA probe, and static pressure tapping in the air intake bleed chamber. The ACU operates dual servo valves on the ramp

actuators. In the event of failure, a solenoid valve will close and freeze the intake ramps in the position in which they were at the time of failure.
Normal operation of the system will position the ramps between — 6.0 degrees and + 18 degrees as a function of Mach number, AOA and engine demand. A mechanical lock is provided in each actuator and can be engaged only with the ramps in the fully open position (-7 degrees) by selecting the associated override switch to ORIDE. If hydraulic pressure is available and NORMAL is reselected the mechanical locks will disengage.
The OPEN indication on the AICP will illuminate when the ramps have reached the — 1.0 degrees position, but no indication is given of engagement of the mechanical locks in this position.

NOTE for Microsoft Flight Simulator:

Variable intake ramps were present only on early versions of the Tornado, and have been remove from newer versions. In the simulation, they are present only on the IDS variant, however relevant controls and indicators are present (and operating) on all variants.

Air Intake Control Panel

The AICS control panel (see figure) contains the following controls:

RAMP POSITION INDICATORS

Two RAMP POS two-way indicators show the in-take ramp positions: OPEN or black and white stripes when the intake ramps are not open.

RAMPS TEST PUSH BUTTON/INDICATOR
A TEST push button, guarded by a transparent cover, initiates a pre-flight BITE test when pressed. Three separate captions show:

- White for TEST
- Green for GO
- Red for NO GO

RESET PUSH BUTTON/INDICATORS

Two combined push button/warning lights marked FAIL-PUSH TO RESET. If a system fails the associated warning light illuminates. Pressing the PUSH TO RESET button causes the system to resume operation if the failure was only a transient one.

RAMPS OVERRIDE SWITCH

Two two-position toggle switches, marked NORM/ORIDE, are guarded by black and yellow striped covers in the NORM position. Lifting the guards and selecting the switches to ORIDE unlocks the ramps during emergency operation and drive the intake ramps under hydraulic power to the fully open —7 degrees position, where the mechanical lock engages.
With hydraulic utility pressure available, selecting NORM will disengage the mechanical locks. It is therefore mandatory to maintain the ORIDE position when a hydraulic failure is indicated. The ORIDE position can also be operated to engage the mechanical locks if no actual failure has been sensed by the system.

Central Warning Panel

On the central warning panel in both cockpits an amber warning caption RAMP illuminates if either or both hydraulic actuator lock are frozen.

BITE Test

Before take-off and below 70% NH a pre-flight BITE-test should be carried out by pressing the TEST button (white illumination) on the AICP. If both systems are functioning correctly the green GO indication on the AICP will light up. A malfunction in either system will cause the red NO GO indication to light up.
During the BITE test the two FAIL indications and the RAMP indications on the CWP will also come on when the fail mode is checked. On satisfactory completion of the test the TEST and GO indications shall be extinguished by pushing the illuminated buttons a second time. The BITE system is inoperative during flight.

Air Intake Automatic Operation

The AICS will automatically schedule intake airflow throughout the flight envelope to match flight conditions and engine demand. At speeds below Mach 1.3 the ramps are held fully open. During acceleration at

approximately Mach 1.3 the ramps are stepped to the 0-degree position, and progressively scheduled to the fully closed position thereafter. The RAMP POS indicators will show black and white stripes.
During deceleration the ramps are progressively scheduled from the fully closed position, and at approximately Mach 1.1 are stepped to the fully open position.
At constant Mach number an increase of AOA will progressively open the intakes and vice versa. Actual ramp position in supersonic flight above Mach 1.3 is a function of all signals received in the ACU: side pitot and side static pressure, Mach number, incidence (a) and engine demand (bleed air static pressure).

ENGINE OIL SYSTEM

The oil system (see figure) is self-contained within the engine and provides circulation of oil to lubricate and cool the engine main bearings, the engine gearbox, oil and fuel pump drives and bearings.
Oil is drawn from the tank by a pressure pump and delivered to a pressure filter, excess oil is returned to the inlet side of the pressure pump through a differential pressure relief valve. Separate tapping are provided downstream of the filter to feed the engine main bearings, which are located in three separate chambers. Pressure oil is also fed to the gearbox, to the oil pumps assembly, and to two accumulators which provide a supplementary feed to the No. 4 bearing in negative g conditions.
A non-return valve is fitted in the pressure delivery line, downstream of the pressure filter, to prevent oil flowing back to the pump should a failure in the pump occur. Oil from the gearbox and intermediate and rear bearing chambers is returned by scavenge pumps to the oil tank via a fuel cooled oil cooler, which is protected from overpressure by a pressure relief valve. The front bearing chamber is scavenged by the pressure pump. Scavenge filters are fitted in the oil return lines. Magnetic chip detectors in each filter provides an indication of engine wear and warming of engine components breakdown. The bearing chambers and the accumulator are vented by means of a Cyclone type oil separator, which separates vent air from oil mist. The separated oil is returned to the oil tank through the gearbox oil return line. The Cyclone type oil separator and the oil tank are vented to the external gearbox which in turn is vented overboard via a centrifugal breather and a pressure maintaining valve. This valve provides minimum positive pressure in the system to prevent pressure pump ‘cavitation and to assist oil return to the scavenge pumps.

Central Warning Panel

A pressure switch illuminates an amber (Post mod.00562: red) L OIL P or R OIL P warming caption (Post mod. 01361: after a 3 sec time delay) on the central warning panel in each cockpit, should differential pressure in the main oil system between the oil feed and the scavenge oil fall below 105 kPa. A second switch, set at 35 kPa will illuminate the CWP captions immediately when the pressure in the supplementary system delivery line falls below this value.
Engine oil temperature is sensed by a thermistor type temperature probe in an oil feed line and is set to initiate an amber L OIL T or an R OIL T warning caption on the central warning panel in the front cockpit should oil temperature rise above 165 degrees C.

ENGINE FUEL CONTROL SYSTEM

Each engine fuel control system automatically provides optimum fuel flow for any throttle setting. The system responds to several engine operating parameters and makes it unnecessary to adjust the throttle in order to compensate for variations in inlet air temperature, altitude or airspeed. The main engine fuel control unit (MFCU) is a hydro-pneumatic/mechanical system that adjusts and supplies the fuel flow to the burners in response to control unit electronic (CUE) signals routed through electric channel known as lanes.
The engine fuel system consists mainly of:

- A HP, engine driven gear type pump

- A fuel metering valve, in conjunction with a pressure drop control unit, establishes the metered fuel flow to the burners

- A pressure raising valve to maintain a minimum system pressure

- A HP shut-off cock (HP SOC) to isolate the engine from all main system fuel supplies when the engine is shut down and in its open position, to admit the metered main fuel flow to the burners. The opened and the closed positions of the ITP SOC are controlled by an opening solenoid and a closing solenoid respectively. The opening solenoid also admits the starter fuel flow to the starter jets during the engine starting cycle

- A dump valve to drain overboard all fuel downstream of the HP SOC at engine shut-down

RB199 MK101 OIL SYSTEM – SCHEMATIC

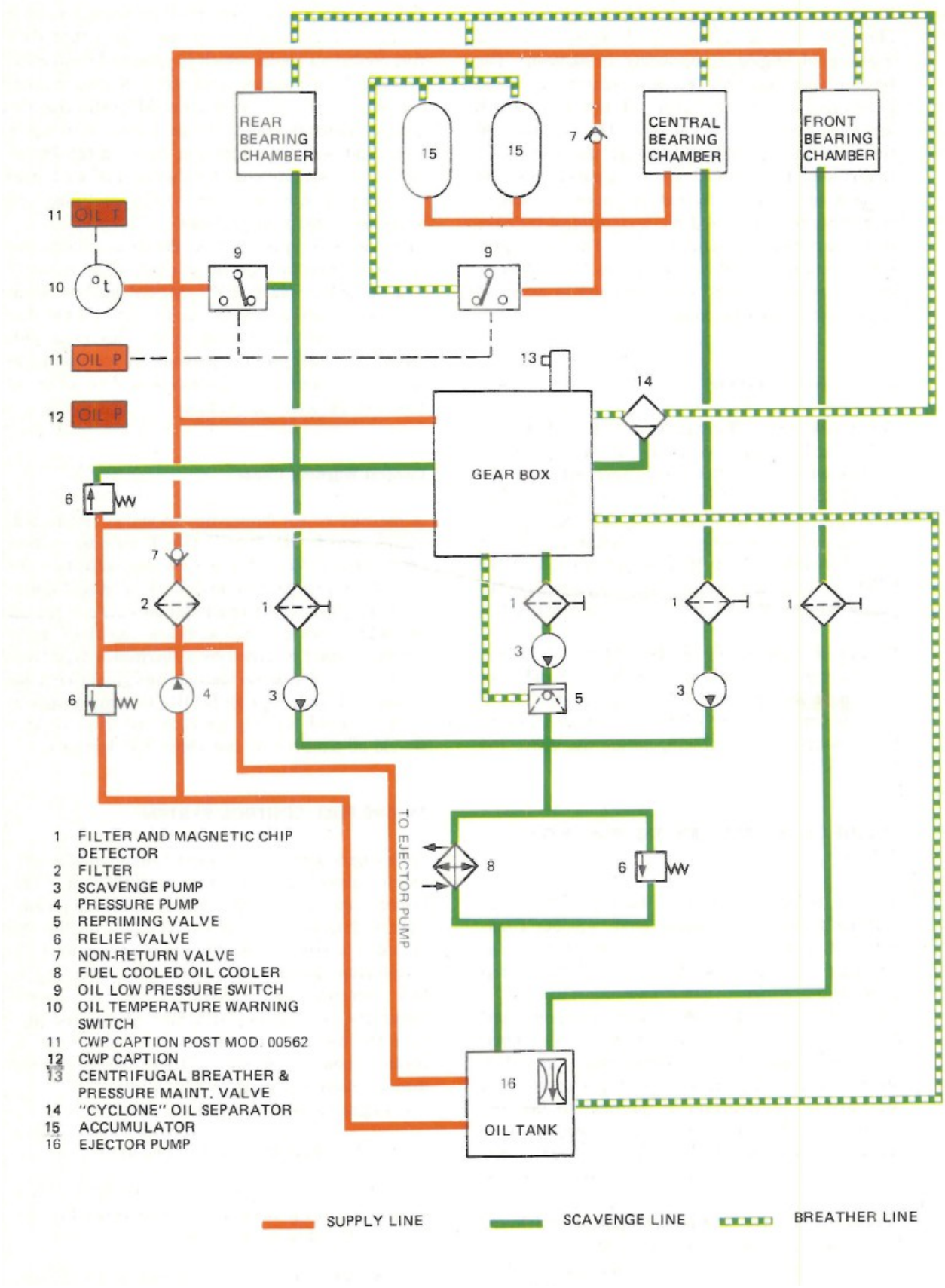

- A pneumatic servo system (acceleration control) which adjusts the metering orifice of the fuel metering valve during engine acceleration as a function of the ITP compressor pressure ratio

- An emergency spill valve and its solenoid limits the fuel flow to the burners in. response to signals from the overspeed governor to prevent overspeeding of the LP and HP spools

- A thermostatic recirculation valve which limits the fuel temperature within the engine fuel system by maintaining sufficient fuel flow through the system

- A check valve that is fitted in the starter fuel line to maintain the system in a fully primed condition and to prevent seepage of fuel into the engine when it is stationary

Basically, engine RPM is demanded by throttle lever position and the actual HP shaft RPM is detected by a pulse probe. The two values are compared in the CUE and the difference in the form of an electronic signal is used to control the fuel metering valve in the main engine fuel control unit.
The electronic signal is received in the metering unit by an electric pressure control solenoid. The solenoid adjusts, by means of a hydropneumatics servo system, the magnitude of the fuel variable metering orifice (VMQ) in the metering valve. In conjunction with the VMO pressure drop controller, this orifice establishes the required fuel flow.
Adjustable mechanical stops are incorporated which allow the adjustment of over and underfuelling for acceleration and deceleration. In the event of CUE failure, maximum acceleration and deceleration are governed by the fuel control system.
A combined NL/NH overspeed governor operates independently of the CUE to energize an emergency electric pressure control solenoid whenever NL reaches 106.5% or NH reaches 105%. The solenoid opens an emergency spill valve, which spills surplus fuel from the burner lines back to the HP pump inlet, thus limiting the fuel flow to prevent over-speeding.
by isolating the burners from the main engine fuel supply and returning the output from the fuel metering valve to the inlet side of the HP pump. The cock is operated by two solenoid valves ("open” and “close”). During engine ground starting, the open solenoid valve is energized automatically 5 seconds after initiating an engine start, to provide a fuel supply to the starter jets and to the opening side of the HP SOC, but the SOC remains closed until the throttle is selected to IDLE. When the throttle is selected to IDLE, the close solenoid valve is deenergized and the HP SOC is opened and remains latched open by fuel pressure. The fuel supply to the starter jets is cut off automatically at 60% NH or 40 seconds after operating the engine start switch. The HP cock remains open until the close solenoid valve is again energized by selection of the throttle to HP SHUT. A dump valve in the line between the HP SOC and the burners opens to dump fuel in the line overboard when the IP SOC closes.
For airborne starting or relighting, the open solenoid valve is energized by the relight button. This provides a fuel supply to the starting jets and also opens the HP SOC, when the pilot’s throttle is not in the SHUT position.

Main Electronic Control

Engine rating is selected by demands from the pilot’s throttle lever which is mechanically connected to the pilot’s demand unit (PDU). The PDU produces an AC signal in direct proportion to the throttle lever angle. This signal is amplified and converted to a DC signal and fed to one of the two lanes in the CUE. Lane 1 is the normal control channel through the CUE. Lane 2 is used if lane 1 fails and provides a duplicate channel with full control through CUE.
The CUE uses the PDU signal, together with other engine operating data, as a basis for a command signal to the MFCU. An electric pressure control solenoid receives the command signal and controls the fuel metering valve to set up the required engine fuel flow.
In addition to lanes 1 and 2 for dry engine control, the CUE contains a single lane for reheat control.
Lane 1 and lane 2 incorporate the following functions:

NH CONTROL

The required HP shaft RPM (NH) is selected on the throttle and a PDU signal, proportional to the RPM selected, is fed to the CUE. The actual NH is detected by a pulse probe and is fed, as a frequency signal to the CUE. The two values are compared in an error unit and, if different, the resulting error signal enters an error integrator from where it emerges as a smoothed output, proportional to the input signal strength and duration. This output is then fed through a “lowest fuel wins” logic circuit. This circuit compares all error signals from the limiter error units within the CUE and passes as its Output a signal, demanding the lowest fuel flow to achieve the required result. This output passes to a current driver, which converts the signal to the required current to operate the electric pressure control solenoid. The solenoid adjusts the fuel metering

valve that establishes an engine fuel flow to give the RPM selected. At a selected throttle lever position the NH speed remains constant, regardless of aircraft speed or altitude, except when overridden by any limiters.

ACCELERATION CONTROL

The engine RPM rate of change during acceleration is limited by the CUE as a function of the free stream total pressure Pto. This function is defined as follows:
7% NH/sec^2 at Pto ≤100 kPa, decreasing linearly to 0.7% NH/sec^2 at Pto = 0 kPa. This means, for example, that the engine acceleration rate on the ground is approx. 7% NH/sec^2 while at 36.000 ft and Mach 1.0 it is approx. 3.5% NH/sec^2.

DECELERATION CONTROL

The conditioned NH signal is differentiated to give NH rate and passed to a rate limiter set to 6% NH/sec^2 (Post mod. 01431: 7% NH/sec^2).
A tendency to exceed the limit causes an error signal to be passed to the “highest fuel wins” circuit via an error integrator, thus modifying the LPC solenoid signal and increasing fuel flow until the rate of deceleration is on the limit.

IDLING CONTROL

The idle NH speed is established by the idle schedule of the CUE. An idle function generator computes the schedule from inputs of ambient static pressure, free stream total pressure and intake total temperature, and applies an output to the governor shaper modifying the NH signal demanded by the throttle position.

TEMPERATURE LIMITER

The CUE determines the TBT limit as a function of intake temperature (T1) and Post mod. 01431: free stream total pressure Pto. Actual turbine blade temperature (TBT) is compared to this value. If actual TBT exceeds the limit value, the resulting error signal is passed via an error integrator and the “lowest fuel wins” logic circuit to produce an electric pressure control solenoid signal. The signal reduces engine fuel flow until engine temperature is on the datum. The datum can be changed as follows:

- Selecting the TBT switch to DATUM the maximum normal cleared thrust is obtained

- Selecting the TBT switch from DATUM to LOW decreases the normal maximum TBT by 36 degrees C

- Selecting the throttle to COMBAT increases the datum by 15 degrees C (Post mod. 01431: 23 degrees C) for each TBT switch position.

Lane Control

The aircraft is fitted with a CUE 300 (Post mod. 01431: CUE 400) in which lane | is a normal operating channel and lane 2 is a standby duplicate channel, which is also functioning but is not selected. Both lanes have reversionary channels; lane 1 reversionary as well as lane 2 reversionary have an NH governor and a TBT limiter.

Should a failure on lane | be detected a “safety select” feature automatically transfers control to lane 2, if lane 2 is serviceable (if lane 2 is already failed, control is automatically transferred to lane 1 reversionary). A lane control failure illuminates the amber L THROT or R THROT captions on the central warning panel (CWP) in the front cockpit. The captions cancel when a successful automatic transfer to lane 2 is followed by selecting LANE 2 on the engine control panel. Whenever lane 2 is selected lane | is de-energized. The captions re-appear, together with the REHEAT caption, and remain lit if a failure of lane 2 transfers control to lane 2 reversionary. Switching to reversionary lane causes reheat, if lit, to be maintained frozen at the selected position when the failure occurred. When reheat is cancelled the nozzle will go to emergency nozzle closure (ENC) automatically. Engine handling with a throttle warning on lane 2 shall be carried out with reference to the NH and TBT indicators. If NH cannot be controlled, lane 2 reversionary has failed.
There is no automatic transfer of control from lane 2 reversionary to lane | reversionary, however, lane 1 reversionary may be gained by selecting LANE 1 on the engine control panel. The failure of both reversionary channels releases electronic control and engine speed can increase until restrained by the emergency overspeed governors (see “ENGINE FUEL CONTROL SYSTEM’.
If lane 2 has failed, the CUE 300 still accepts a lane 2 selection from a serviceable lane 1, with the consequence of an engine run-up to the overspeed governor limit if lane 2 reversionary has also failed.

CUE LANE TEST

Two LANES TEST buttons on the engine control panel allow testing of the CUE automatic lane changeover by simulating a failure on the lane selected by the ENG CONTROL switch. The tests may be carried out both before or after starting the engines. After starting, however, the test shall not be carried out at other than idle RPM.
With LANE 1 selected, pressing and holding the appropriate LEFT or RIGHT button initiates the automatic change to Lane 2 and activates the amber L THROT or R THROT CWP warning. The LEFT button **only** also simulates oil, fuel and TBT over-temperature conditions resulting in the TBT indication being driven in excess of 925° C for **both** engines and activation of L and R TBT, OIL T and FULL T warning captions on the CWP. Releasing the button cancels. the warnings and reselects Lane 1.

NOTE

If an engine is cold, the appropriate CWP TBT caption may not come on until after about 2 minutes running.

With LANE 2 selected, pressing and holding a LANES TEST button initiates the automatic changeover to LANE 2 reversionary. When both buttons are pressed, the same indications will appear as for LANE | testing plus illumination of an amber REHEAT caption on the front cockpit CWP. Only with running engines the nozzle will go to ENC, which shall be reset after releasing the buttons by pressing the relight button on the appropriate throttle. When LANE | is reselected the L or R THROT indication may illuminate during the transfer and extinguish when the transfer is completed.
A lanes test with LANE 2 selected will cause setting of the REHEAT indication on the maintenance panel which should be reset.

Engine Vibration Detection

Engine vibration is detected by transducers located at the front and rear of engine body. Signals equivalent to vibration levels are fed from the two transducers to an engine vibration amplifier. Whenever the vibration levels exceed 50 mm/sec (front) or 35 mm/sec (rear), the engine vibration amplifier activates the amber L VIB or R VIB captions on the CWP. Activation of the amber L/R VIB captions is registered by the crash recorder and engine vibration exceeding 40 mm/sec (front) or 24 mm/sec (rear) is registered on the Central Maintenance Panel.

ENGINE REHEAT SYSTEM

Reheat augments engine thrust by injecting fuel into the engine exhaust stream in the reheat section where it is ignited by a hot streak ignition system. Selection of the reheat is achieved by moving the throttle lever beyond the MAX DRY position detent. This initiates the operation of a sequence timer in the reheat electronic control, which drives the nozzle and the reheat fuel control unit (RIFCU) through a priming, settling, ignition and topping-up sequence. After the light up sequence the nozzle is positioned according to the degree of reheat selected by the throttle.
The reheat fuel flow is scheduled by the CUE as a function of nozzle area or via RHFCU as a function of compressor delivery pressure HP shaft speed and intake temperature.
The system takes 3 seconds from MAX DRY to MAX REHEAT at sea level, and 3.5 seconds to cancel.

NOTE for Microsoft Flight Simulator:

The MSFS rendition implements the afterburner detention control: in order for the reheat system to engage, therefore the TOGGLE AFTERBURNER command must be assigned and enaged.

Reheat Fuel System

The reheat fuel system supplies fuel to both the hot main stream reheat zone and to the cold bypass stream reheat zone. The reheat fuel system consists of the following major components:

- Vapor core pump (VCP) and inlet valve

- Main metering valve (MMV) and primary metering valve

- Pressure drop regulators (PDR)

- Dual throttle valves and colander pressurizing valve

- Light-up and cancellation controls

- Emergency shut-off valve

- Shut-off, primary and dump valve (SOPDV)

After the light-up sequence, reheat fuel flow is scheduled by the RHFCU (via CUE) as a function of nozzle position, which in turn is a function of the throttle demand.
A vapor core pump, driven by the engine gearbox and controlled via an inlet valve supplies high pressure fuel to the RHFCU. The fuel passes through a main metering valve with two orifices, one of which meters hot zone fuel flow and the other the cold zone fuel flow. The area of the orifices is controlled by the fuel turndown actuator to give the fuel flow required for the degree of reheat selected. Both orifices are also controlled by HP compressor delivery pressure to allow for changes of air mass flow through the engine. Normal cancellation of reheat is achieved by moving the throttle to the dry range, which selects the nozzle to the closed position. The fuel turndown actuator follows the nozzle position until the actuator reaches a present angle whereupon it closes completely, shutting off the fuel. In the event of an electronic reheat system failure during reheat operation, reheat is frozen, the amber REHEAT caption on the front cockpit lights up and when the throttle is moved back into the dry range an emergency shut down solenoid valve cancels and latches reheat and nozzle area gauge indicates the ENC value. In the event of reheat electronic control system failure when in dry power, the reheat is inhibited and the REHEAT caption, on the CWP, comes on. However, if it is a transient failure, it can be reset by pressing the relight button on the relevant throttle.

Reheat Electronic Control System

Reheat selection and modulation is made on the throttle lever, which is mechanically connected to the Pilot's Demand Unit (PDU). The PDU signal is fed via a signal channel logic circuit to the reheat control within the CUE. The reheat control uses the PDU signal together with other relevant input data to drive three actuators. One to select a nozzle position, one to control the reheat fuel flow as a function of actual nozzle position and one to control the reheat fuel flow as function of intake temperature. When the throttle lever is moved beyond the MAX DRY position detent, the resulting PDU signal initiates the operation of a sequence timer in the reheat control to drive the nozzle position actuator and the fuel tum-down actuator through the light-up sequence. Subsequent to reheat light-up, change-over switches are operated by the sequence timer to move control of the nozzle position actuator from the sequence timer to an error unit in the reheat control. A nozzle position feedback signal (Aj) is compared with the selected nozzle position signal from the PDU in the error unit. Any resulting error signal is used to drive the nozzle position actuator. The reheat electronic control system maintains the dry running nozzle area when reheat is off. The reheat control system provides a partial protection against reheat blow out or failure to light. At approach and take-off conditions with reheat nozzle above 70-75% Aj the nozzle will automatically cancel to dry nozzle area in the event of reheat blow out or failure to light. Automatic cancellation may not occur at demanded reheat settings of less than approximately 70-75% Aj. In this case a thrust considerably less than maximum dry will be experienced until the pilot moves the throttle back to MAX DRY. In either case further reheat selections may be made after moving the throttle back to the dry range.
If the reheat control system or if both LANE 1 and LANE 2 main control lanes fail, a safety logic will freeze the reheat control, allowing reheat to be maintained at the position existing at the time of failure. If it is required to shut down reheat, movement of the throttle to the dry range will remove power from the solenoid of the emergency shutdown valve, which after a delay of three seconds (to prevent interference with normal shut-down sequence) will close the reheat pump inlet valve, shutting down reheat fuel.
The safety logic will energize the emergency nozzle close valve 0.5 seconds after fuel supply shut-down. A latching system will prevent reselection of reheat. The reheat light-up sequence will take place only if the following conditions are fulfilled:

- The thrust reverse buckets are not deployed.
- NH is above approximately 87%.
- Sufficient time for purging (5 seconds) has elapsed since the previous cancellation of reheat.
- Angle of tum-down actuator is less than 5 degrees.

NOTE for Microsoft Flight Simulator:

Some of the reheat engagement conditions do not apply to the simulation.

Reheat Ignition

The function of the reheat ignition system is to ignite the fuel in the reheat section and initiate reheat operation. Advancing the throttle into the reheat range satisfies the fuel flow requirements for reheating the hot gas stream and the by-pass stream. During ignition the "hot shot" system injects a timed and metered spray of fuel into the combustion chamber through a hot shot injector to create a flame streak, which ignites the reheat fuel from the primary vaporizers.

ENGINE VARIABLE NOZZLE SYSTEM

The variable nozzle system opens and closes the engine exhaust nozzle for reheat modulation.
The moving shroud, multi-petal, variable area nozzle comprises 14 pairs of interlocking petals hinged to the rear of the jet pipe. Rollers mounted in the moving shroud run on tracks in the flaps to vary nozzle area in proportion of the fore and aft movement of the shroud. The shroud is positioned by four screws jacks driven through flexible ring shafting by an air motor.
The nozzle area control is a pneumatic-mechanical unit that sets the nozzle area according to the throttle reheat demand. The nozzle area is varied only during reheat operation between 32 and 102% indicated. During dry engine run the nozzle actuation system is electrically controlled to maintain a fixed area of approx. 16%. Selecting the TAXI NOZZLE lever to OPEN operates a microswitch.to provide signals to the CUE to fully open the nozzles, thereby reducing thrust to an acceptable level for taxiing. The lever selection also positions mechanical stops which limit the throttles at 17.5 degrees (which corresponds to approx. 75% NH) before the MAX DRY detent. Airborne nozzle opening is inhibited by means of WOG switch.
A solenoid valve in the nozzle actuation system is energized by the reheat safety logic in the CUE, following a reheat control failure (sec "REHEAT ELECTRONIC CONTROL SYSTEM"). The valve operates to close the nozzle until the position in the air motor reaches the limit of its travel, giving a minimum (ENC) area of 5 to 13% indicated. Pressing the throttle relight button attempts to reset the reheat safety logic for the associated engine.
If the reset is successful, the nozzle area increases from ENC to 16% indicated. Reheat will not reset if electronic control is on a reversionary control lane.

NOTE for Microsoft Flight Simulator:

Nozzle opening indication in the simulation may differ from real-life.

In the simulation, the TAXI NOZZLE lever only limits the throttle movement.

ENGINE IGNITION AND RELIGHT SYSTEM

The function of the engine ignition system is to initiate ignition of the fuel in the combustion chambers during the starting cycle, and to provide an engine ignition source in the event of a flame-out. Ignition is achieved by the high energy electrical discharges from two surface discharge ignitor plugs in the combustion chamber ignitor tubes. Power to each plug is supplied by a high energy ignition unit (1 IE), each comprising two circuits; an AC circuit which is non-operative and a DC circuit for engine starting and relighting. for engine starting the ignition circuits are energized when the ENGINE START switch is selected to LEFT or RIGHT and remains energized for 40 seconds (Pre mod. 00541: 30 seconds) after releasing the switch, or until the engine accelerates through 60% NH, whichever is the sooner.
For engine relight on a windmilling engine, the ignition circuits are energized for 40 seconds (Premod. 00541: 30 seconds) by pressing the relight button on the throttle. This also energizes the HP cock opening solenoid to provide a 40 seconds (Premod. 00541: 30 seconds) fuel supply to the starter jet. When the IGNITION switch on the ENG CONTROL panel on the front cockpit right console is set to the NORM position, automatic ignition is provided by the CUE which activates the DC circuit whenever the throttle lever position is at IDLE or above and:

a) NH deceleration is outside predefined boundaries (flameout)
b) NH is below predefine boundaries.
c) Weapons firing

CAUTION

WHEN THE HP COCK IS SHUT, IT WILL NOT REOPEN WHEN THE THROTTLE IS SELECTED TO IDLE, UNLESS THE OPENING SOLENOID IS ENERGIZED, AS NO FUEL IS AVAILABLE TO OPEN THE HP SOC MECHANICALLY AGAINST SPRING PRESSURE. THE OPENING SOLENOID IS ENERGIZED BY THE ENGINE START SWITCH EITHER PRESSING A RELIGHT BUTTON, OR BY THE AUTO IGNITION FUNCTION or THE CUE.

NOTE

NH is a parameter which is dependent on air inlet total temperature (Tt1).

Auto-ignition by the CUE can be switched off by the ignition switch on the ENG CONTROL panel from NORM to OFF.

Relight Push Buttons

A relight push button is located on the rear of each throttle lever. Pressing a relight button will:
- Activate the associated engine DC igniter circuit for 40 seconds
- Energize the opening solenoid of the HP SOC for 40 seconds to provide fuel to the starter jets
- Open the HP SOC after moving the throttle from SHUT to IDLE

ENGINE STARTING SYSTEM

Ground starting of the engines is achieved by the secondary power system. The HP shafts of left and right engines are connected to airframe mounted accessory gearboxes by power take-off shafts. An auxiliary power unit (APU) drives the right accessory gearbox through a friction clutch. The accessory gearboxes can be interconnected by a crossdrive shaft and clutch, allowing both engines to be driven by the APU or either engine.

For engine starting a torque converter is installed on each gearbox. With the APU running and driving the right gearbox, selecting the ENGINE START switch to the: appropriate position will cause the torque converter to fill with oil and the selected engine to rotate via the power take-off shaft. Engine ignition system will also be initiated. The APU is automatically shut down when engine speed reaches 60% NH. The second engine is started in a similar manner, but with the gearbox being driven by the running engine.
To cancel start, the start cancel pushbutton shall be pressed and the throttles shall be selected to the HP SHUT position.

ENGINE THRUST REVERSAL SYSTEM

The thrust reverser comprises two "buckets" attached to the jet pipe by means of eight movable links. Driven by an air motor through flexible ring shafting, the links swing rearwards to position the buckets downstream of the nozzle, deflecting the jet efflux forward to provide a reverse thrust of approximately 50% of the corresponding forward thrust from IDLE to MAX DRY setting.
Strakes in each bucket deflect the lower regions of the jet efflux sideways to reduce hot gas re-ingestion by the engines. A re-ingestion audio warning is given at 60 knots using the low-pitched (600 Hz) interrupted tone. The system can either be activated after landing or pre armed in flight to operate immediately following touchdown. Rocking the right throttle outboard in the dry range feeds a signal to an electronic logic unit, which supplies control signals to both engine thrust reversal actuator systems. The bucket lock mechanism is disengaged, and the buckets deployed within one second, provided that the aircraft weight is on the landing gear, i.e., the right weight on ground (WOG) switch is closed. The system may be preselected prior to touchdown, provided that the LIFT DUMP magnetic indicator shows a white cross on grey background. An OL (oleo switch circuit) indication in flight denotes a WOG microswitch circuit failure, and to preselect the system under these circumstances presents the danger of bucket deployment in the air and shall therefore be avoided.
The airbrakes, if extended, are automatically retracted upon thrust reverser deployment.

THROTTLES

A set of throttles (see figure) is provided in the front cockpit. A throttle lever controls each engine from HP SHUT in the full aft position to COMBAT in the full forward position, passing through IDLE, MAX DRY and MAX REHEAT positions. The levers can be rocked outboard in the dry range only to select reserve thrust and/or lift dump.
A latch on each throttle quadrant prevents inadvertent selection of the throttle levers to HP SHUT. The latches shall be pressed forward to allow the throttle levers to be moved from IDLE to HP SHUT.

Taxi Thrust Selector

A selector lever (see figure) which when lifted and rotated forward displays TAXI NOZZLE OPEN in red, and fully opens the nozzles, thereby reducing thrust for taxiing purposes. With taxi thrust selected, throttle movement is restricted to approx. 75% NH and reverse thrust is inhibited, although the throttles may still be rocked outboard. In the normal thrust position, the selector displays TAXI NOZZLE SHUT in white.

ENGINES CONTROL AND INDICATORS

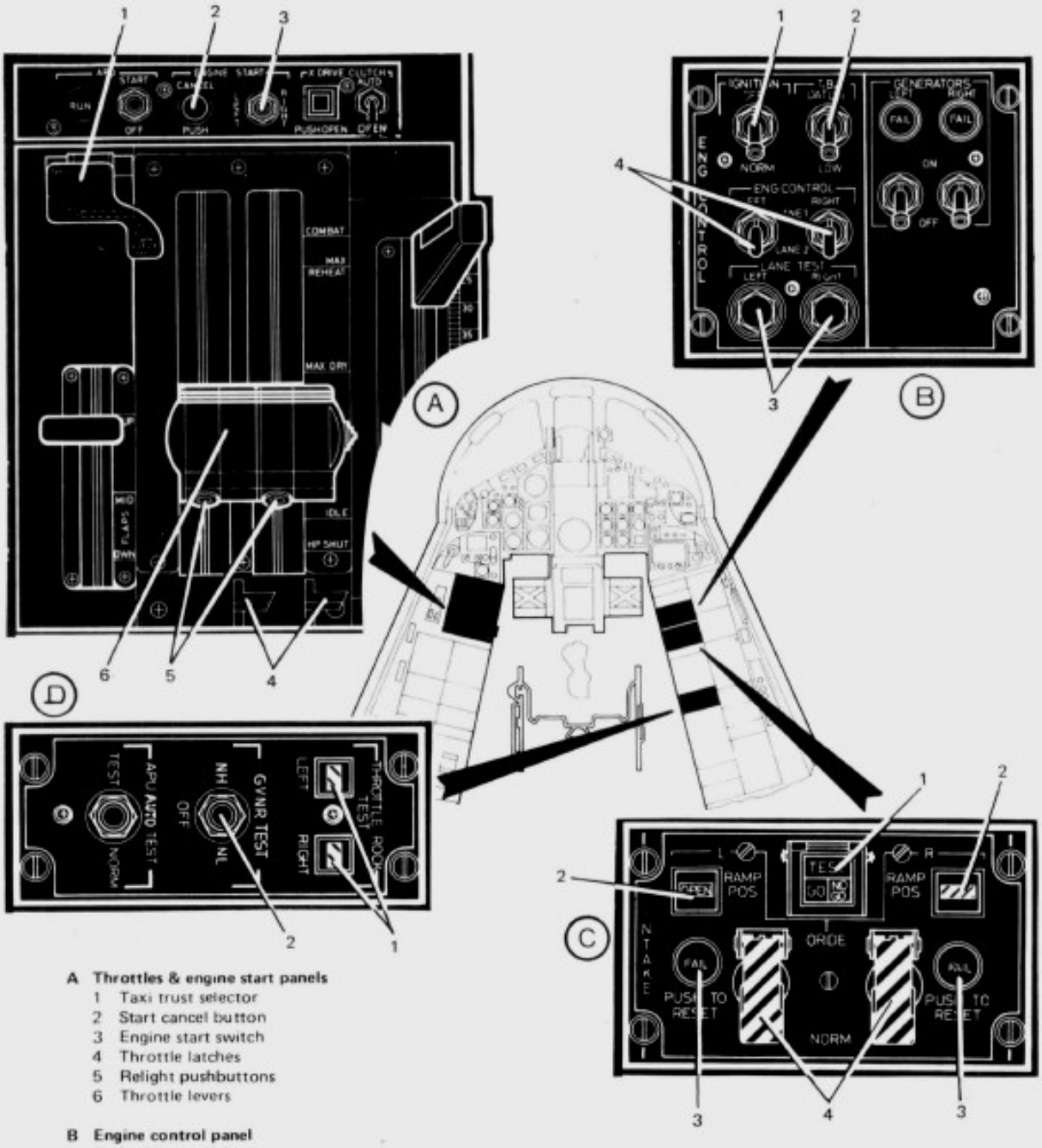

A Throttles & engine start panels
1 Taxi trust selector
2 Start cancel button
3 Engine start switch
4 Throttle latches
5 Relight pushbuttons
6 Throttle levers

B Engine control panel
1 Ignition switch
2 TBT switch
3 Lanes test buttons
4 Engine control switches

C Air intake control panel
1 Ramp test pushbutton/indicator
2 Ramp position indicators
3 Reset pushbutton/indicators
4 Ramps override switches

D Engine test panel
1 Throttle rock test indicators
2 Governor test switch

ENGINE INSTRUMENTS AND CONTROLS

Engine Start Panel

The engine start panel (see figure) comprises the following controls:

ENGINE START SWITCH
The engine start switch is a three-position toggle switch, spring-loaded to the center of position marked LEFT/RIGHT. Selecting LEFT or RIGHT initiates the start cycle of the corresponding engine.

START CANCEL BUTTON
The start cancel button is a push-button, which when pressed closes the fuel supply to the engine starter jets, deenergizes the igniter units, empties the torque converters and resets the engine start cycle. A green light integral with the button illuminates during the engine start cycle.

Engine Control Panel

The engine control panel (see figure) carries the following controls:

IGNITION SWITCH
The engine ignition switch is a two-position latch-toggle switch marked IGNITION — OFF/NORM. In the OFF position, automatic ignition by the CUE is switched off. In the NORM position, automatic operation of the DC ignition system and energizing of the HP cock opening solenoid to provide the started jet fuel is initiated by the CUE (see ENGINE IGNITION SYSTEM).

TURBINE BLADE TEMPERATURE SWITCH
The turbine blade temperature switch is a two-position latch-toggle switch, marked TBT —DATUM/LOW, which may be selected as required. In position DATUM the TBT datum is set to flight clearance setting.
In position LOW the TBT datum is reduced by 36 degrees C.

LANES TEST BUTTONS
Two push buttons marked LANES TEST —LEFT/RIGHT, when held pressed simulate a failure of LANE 1 (ENGINE CONTROL switch in lane 1 position) to test the automatic transfer of engine control from lane 1 to lane 2. (For detailed information refer to "ENGINE OPERATION, Pre-taxi checks").

ENGINE CONTROL SWITCHES
Two two-position toggle switches marked ENG CONTROL — LEFT/RIGHT — LANE 1/LANE 2, to select the required engine control lane.
LANE 1 — Normal operating lane
LANE 2 — Standby operating lane.

Engine Test Panel

The engine test panel (see figure) carries the following controls:

THROTTLE ROCK TEST INDICATORS
The throttle rock test indicators are two magnetic indicators marked LEFT and RIGHT, which show the result of a throttle rock test.
With electrical power applied to the aircraft, or subsequent to a throttle rock test, the display should be white, indicating that the LD and TR selection circuits are serviceable. A black and white striped display indicates a circuit malfunction or a power off condition.

CAUTION

THE THROTTLE ROCK TEST SHALL ONLY BE CARRIED OUT WITH THE ENGINES RUNNING AT IDLE RPM.

GOVERNOR TEST SWITCH

The governor test switch is a three-position toggle switch marked GVNR TEST — NH/OFF/NL, spring-loaded to OFF, and is used to check the operation of the HP and LP overspeed governors. When NL is selected, RPM indicators display the letters NL and indicate NL compressor speed.

Engine Temperature Indicators

Two indicators (see figure) provide a rotating pointer display (0 — 10 X 100° C) in increments of 100 degrees centigrade, and a repeat digital read-out (0-999) of engine operating temperature. From 0 to 545 degrees C TBT, T7 is indicated. Above 545 degrees C TBT, TBT is indicated. Should a TBT sensor fail, temperature indicator reverts to the T7 mode. A red and black striped flag indicates a display failure, or power off condition, however as the indicator cannot indicate temperatures below 0 degrees C, the flag will appear if the instrument is sensing less than 0 degrees C, e.g., before engine start. To test the correct behavior of the indicator, the appropriate lanes test button should be pressed. The instrument should read 925 ± 5 degrees C within 5 seconds with the flag not visible.
The T7 temperature sensor is situated behind the LP turbine outlet, and TBT is sensed by two pyrometric pickups looking at the intermediate pressure turbine blades.

NOTE

Although the T7 indicator will give evidence of light-up, temperature indications are likely to be inaccurate, particularly in the case of engines not incorporating mod. 40960 when T7 may indicate more than 675 degrees C. As long as the T7 flag on the indicator is visible these values may be ignored.

Nozzle Area Indicators

Two indicators (see figure) with a rotating pointer display nozzle area as a percentage (0 to 100%) in increments of 5%.

Engine RPM Indicators

Two engine RPM indicators (see figure) provide a rotating pointer and a hundreds, tens, and units digital read-out of NH or NI, spool speed as a percentage of a nominal maximum RPM. A red and black striped failure flag covers the digital display when a system malfunction occurs, or at power off conditions. NH or NL flag indicate which spool speed is being displayed.

NL/NH Indication Changeover Switch

The NH/NL indication changeover switch (see figure) is a two-position toggle switch marked NL/NH, spring-loaded to NH, and selects the spool speed to be displayed on both RPM indicators.

Fuel Flow Indicator

An indicator labelled FUEL FLOW (see figure) presents a L and R pointer display of dry power fuel flow in kg/min to each engine.

Reheat Operation Lights

Two reheat operation lights (see figure) are located on the right anti-glare shield and are inoperative.
Post mod. 01670 reheat operation lights are deleted.

Reverse Thrust Indicators and Override Switch

REVERSE THRUST INDICATORS

The reverse thrust indicators (see figure) are two three-position magnetic indicators, marked LEFT and RIGHT
They display:
Grey Indicates thrust reverser buckets in stowed position.
Black and white stripes Indicates thrust reverser buckets in transit mode.
REV White REV on black background indicates thrust reverser buckets are fully deployed.

OVERRIDE SWITCH
A two-position toggle switch marked 0 RIDE/NORM (see figure) permits the use of a single thrust reverser at certain failure conditions.

ENGINES CONTROL AND INDICATORS

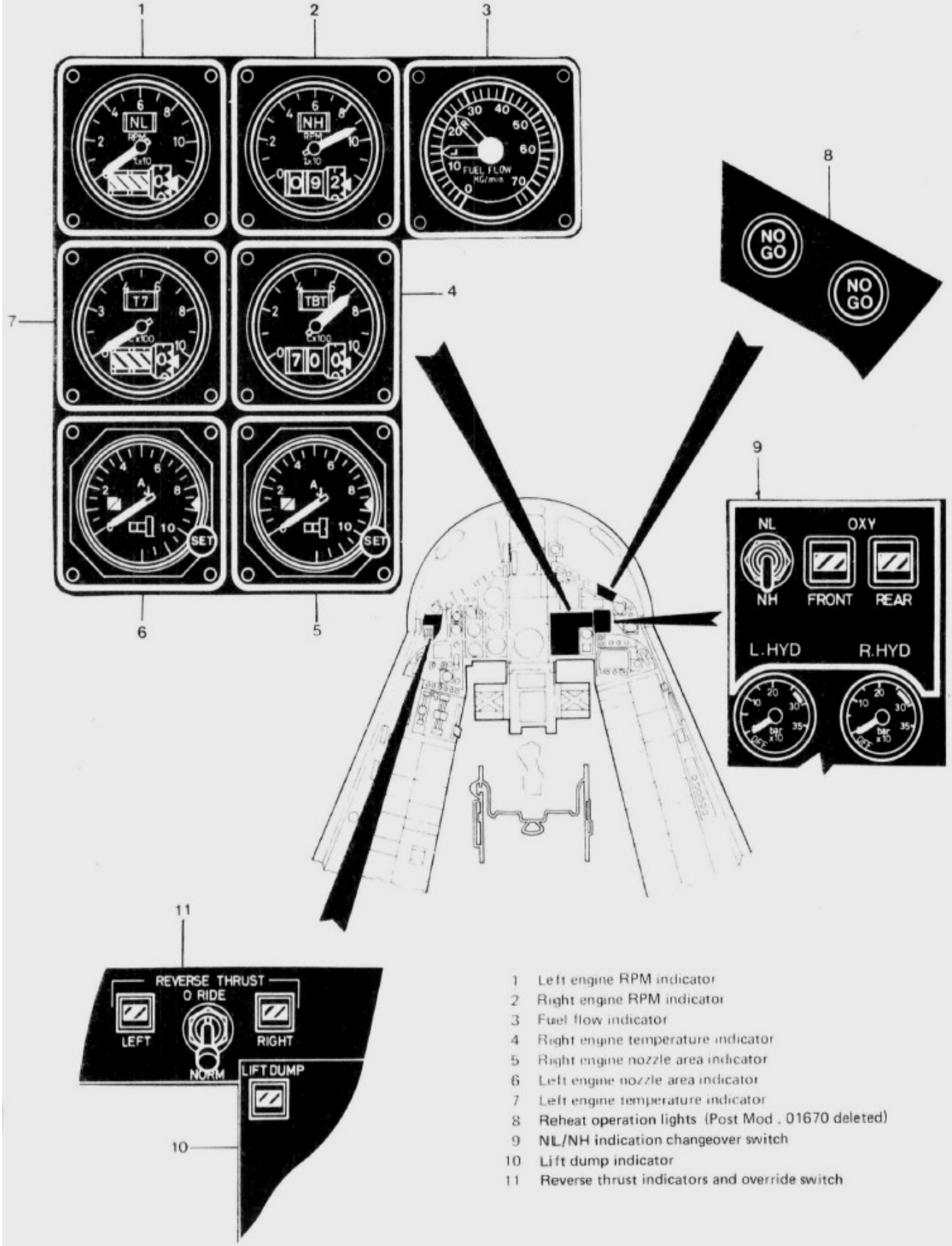

1 Left engine RPM indicator
2 Right engine RPM indicator
3 Fuel flow indicator
4 Right engine temperature indicator
5 Right engine nozzle area indicator
6 Left engine nozzle area indicator
7 Left engine temperature indicator
8 Reheat operation lights (Post Mod . 01670 deleted)
9 NL/NH indication changeover switch
10 Lift dump indicator
11 Reverse thrust indicators and override switch

Lift Dump Indicator

The lift dump indicator (see figure) is a three-position magnetic indicator, marked LIFT DUMP, and displays:

Grey	Main landing gear strut not compressed (Post mod. 01399: white cross on grey background)
OL,	Main landing gear strut compressed.
LD	Lift dump in operation

WARNING

AN OL INDICATION DURING FLIGHT INDICATES A FAULT IN THE OLEO SWITCH CIRCUIT. THE REVERSE THRUST/LIFT DUMP SYSTEM SHALL NOT BE PRE-ARMED IF AN OIL INDICATION IS DISPLAYED TO AVOID AN INFLIGHT THRUST REVERSER DEPLOYMENT.

Crash Panel

The four ganged toggle switches on the CRASH panel (see figure) are operated by raising the black and yellow striped guard marked LIFT-PULL and moving it forward. The FIRE EXT —OFF/ON switch discharges the fire extinguisher into both engine compartments simultaneously. The remaining switches shut down both generators and de-energize all electrical system busbars except the battery busbar.

WARNING

THE ENGINES SHALL BE SHUT DOWN VIA HP COCKS PRIOR TO CRASH BAR OPERATION. IF THIS SEQUENCE IS NOT FOLLOWED THE ENGINES WILL ACCELERATE UNCONTROLLED TO SELF DESTRUCTION BECAUSE ENGINE CONTROL IS LOST AND THE OVERSPEED GOVERNORS ARE NO LONGER OPERATIVE.

Rapid Take-Off Panel

The rapid take-off panel (see figure) includes the following engine controls:

GANGING LEVER
The RAPID TAKE-OFF panel switches can be set to the FLIGHT position either individually or by use of the rapid take-off ganging lever; the OFF position can only be selected individually.

TI PROBE HEATERS SWITCH
A two-position toggle switch labelled T1 PROBE HEATERS controls the electrical power supply to the T1 engine intake temperature probe heaters.

IGNITION MASTER SWITCH
A two-position toggle switch labelled IGNITION which arms the engine ignition and central warning systems when set to FLIGHT.

Central Warning Panel

The central warning panel comprises the following indications for the left (L) and right (R) engine:

RED WARNINGS:

L/R FIRE	Fire or overheating in an engine compartment.
L/R VIB	Engine vibration has reached level 2 (Post mod. 00859: L/R VIB deleted)
L/R REV	Thrust reverser buckets not properly deployed after selection or buckets not properly stowed
L/R TBT	Turbine cooling air overtemperature above 650 degrees C (caption(s) will latch)

NOTE

The caption(s) will unlatch when the left LANES TEST pushbutton is pressed, and temperature is below 650 degrees C.

L/R OIL P =Low engine oil pressure

AMBER WARNINGS:

L/R VIB Vibration in the turbine, or compressor area, or when pressure fluctuations in the reheat section exceed 12.6 kPa (Reheat Buzz).

L/R OIL P Low engine oil pressure

L/R OIL T Engine oil overtemperature.

L/R FUEL T Fuel overtemperature.

L/R THROT Engine main control lane failure.

REHEAT Electronic reheat system or double lane failure (one light serves both engines).

The red L/R FIRE, L/R VIB, L/R REV, L/R TBT captions are repeated on the rear cockpit CWP

ENGINE OVERHEAT AND FIRE DETECTION SYSTEM

Fire or overheat conditions in the engine and APU compartments are detected by sensing element loops which are routed so that they cover the most likely potential fire zones. Each sensing element loop is connected to an individual control unit which operates a relay in the appropriate fire warning circuit. Power to all three control units is supplied from the essential DC busbar.
A fire or overheat condition in either engine compartment will illuminate the red warning lamp in the appropriate fire extinguisher button and the L or R. FIRE caption on the CWP in each cockpit.
A fire or overheat condition in the APU compartment will close the APU fuel supply shut-off valve and illuminate the red APU caption on the red CWP in each cockpit.
The CWP in each cockpit carries the toggle switch marked TEST — 1/OFF/2 spring loaded to the center OFF position. Setting the switch to position 2 tests the integrity of the engine compartment fire warning system.
The APU fire warning system can be tested by the APU AUTO TEST — TEST/NORM switch on the engine test panel (see figure).

NOTE

If the test is made while the APU is running, it will shut down.

ENGINE FIRE EXTINGUISHER SYSTEM

A dual-outlet fire extinguisher bottle is fitted in the right rear fuselage. Each outlet is connected to a distribution system, one for each engine bay. An electrically operated firing head at each outlet, controlled by the appropriate fire extinguisher button, enables the entire bottle contents to be discharged in the affected bay. The CRASH bar will fire both heads simultaneously when operated. The firing heads are powered by the battery busbar.
Two fused indicators, one for each firing head, are fitted in the refuel panel. They provide an indication when the appropriate firing head has been fired: When the head is fired, the fused indicator turns red, giving a visual indication that the extinguishant has been discharged. The fire extinguisher bottle incorporates a pressure relief valve which, if pressure in the bottle exceeds a safe value,

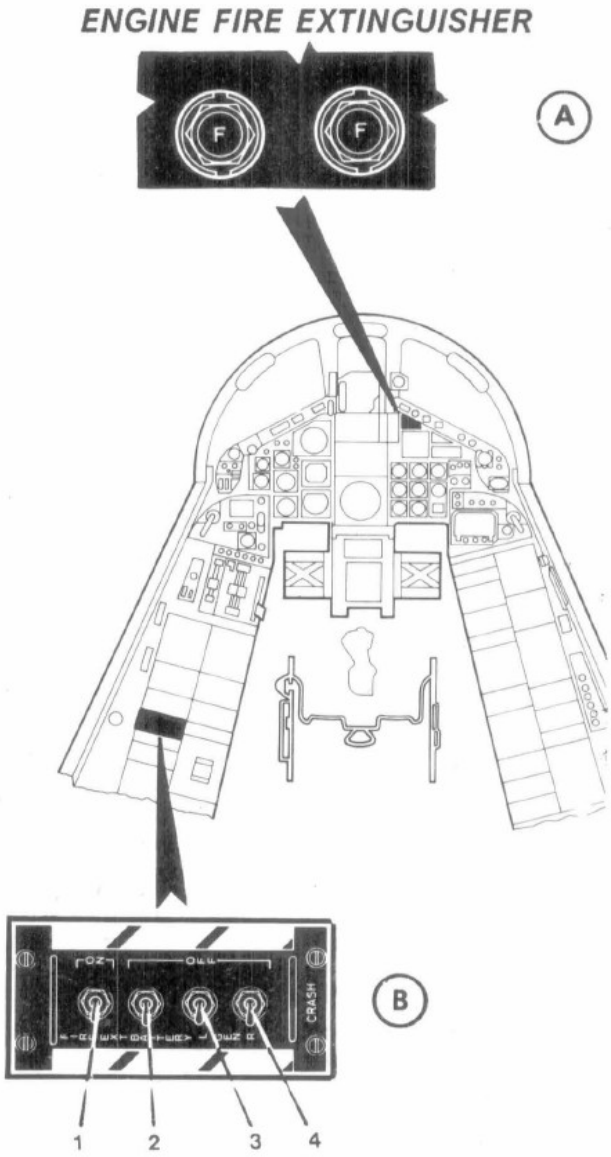

A Fire extinguisher buttons

B Crash panel (Pre Mod. 01655/01663)
1 Fire extinguisher switch
2 Battery switch
3 Left generator crash switch
4 Right generator crash switch

opens to discharge the entire bottle contents overboard through an outlet above the right auxiliary power compartment door. The outlet has an indicator consisting of a bowl with a red inner surface covered by a white cap; if the pressure relief valve opens, the escaping extinguishant displaces the cap to expose the red interior of the bowl.
The fire extinguisher buttons (see figure) actuate the fire extinguisher head individually when pressed.

ENGINE OPERATION

Although the RB 199-34 R is a 3-spool bypass engine equipped with reheat, the engine handling is straightforward. The control of the engine is electronic and different parameters are governing engine behavior under various flight conditions. Although basically a fixed relation between throttle position and NH (N3) is fundamental, the NH idle schedule in the lower throttle range and the engine limiters in the upper throttle range influence this relationship and produce a variation of NH in flight (and hence throttle deadbands) depending on temperature, airspeed, and altitude.
In the reheat range, the relation between throttle position and nozzle area is basically linear. The HP compressor total delivery pressure Pt, (calculated in the CUE) modifies these characteristics in such a way that at lower Pt, the max RH area will be reduced and the area (and hence throttle deadbands) will be seen in flight depending on airspeed and altitude.
The idle schedule, which is holding the engine at approx. 65% NH on ground operation, will in-crease the idle RPM as a function of Mach Number, altitude and temperature. At extreme flight conditions (supersonic), or high altitudes, max. dry will be almost identical to idle. Consequently, during some portions of the flight as already mentioned above, deadbands in throttle response at the idle region, at the max dry region and in the reheat region will be seen.

Ground Operation

ENGINE STARTING
The right or left engine start is initiated by selecting the ENGINE START switch to RIGHT or LEFT respectively. Engine ignition will be operative immediately and after a 5 sec delay fuel will be delivered to the starter jets. T7 will increase to approx. 250 degrees C and at approx. 21% NH the throttle lever has to be set to IDLE to open the HP SOC. Thereafter a steady rise in T7 up to approx. 500 degrees C will be seen. Simultaneously after a short slow acceleration the engine speed will be up to the 65% NH idle speed. T7 is not imposed during starting, but when T7 indication has changed to TBT (this occurs when TBT reaches 545 degrees C cockpit indication), an absolute limit of 675 degrees C TBT shall not be exceeded.
If a hot start occurs, the throttle should be fully closed to the HP SHUT position and the start cancel button pushed to cancel starter jet fuel and ignition. After NH has reduced to zero normally a dry cranking cycle should be carried out before the next attempt to start is made and a draining period of 30 seconds is mandatory. To achieve the dry crank, the ignition master on the Rapid T/O Panel, should be switched to OFF and the engine starter switch selected to the appropriate engine. Before the next start attempt, the ignition master switch will be returned to FLIGHT.

PRE-TAXI CHECKS
After engine start the ignition selector switch should remain in NORM position which will guarantee automatic ignition in case of a flame-out or an extreme deceleration in flight or during take-off. With the ignition selector switch in NORM position, it should, however, be kept in mind that the automatic ignition circuit will be always operative if the throttle is not in the HP SHUT position and certain NH speed condition exists (see ENGINE IGNITION SYSTEM). If, for instance, one engine is shut down in flight or on the ground and the throttle is then reopened (for lift dump or reverse thrust checking), it is possible that any fuel remaining in the engine may be ignited. When both engines are running the operation of the CUE automatic control lane changeover facility should be checked with LANE 1 selected. Pressing the LANES TEST buttons will cause a light transient (max 2% NH) to occur. At the same time the L/R THROT warning on the CWP will illuminate and the TBT indicators will wind up to 925 degrees C. Pressing the left LANE TEST button will initiate an internal check of the engine temperature warning systems, and the amber L/R FUEL T, L/R OIL T in the front cockpit and the red L/R TBT warnings in both cockpits for both engines will illuminate on the CWP. Upon release, all warning lights should extinguish and TBT/T7 readings return to normal.
When Lane 2 is selected and the same test is repeated, the same warnings and indications as above will be displayed but the light transient will be seen immediately when LANE TEST is selected. In addition, the nozzle will now be observed to close from 5 to 13% (ENC) and the amber REHEAT caption on the CWP in the front cockpit will illuminate. To reset the nozzle to normal, the relight buttons shall be pressed. After approx. 3 seconds the engine will return to normal nozzle position and the REHEAT caption will extinguish. Thereafter the lane switches shall be reselected to Lane 1 and again the throttle warnings will illuminate for a short period.

NOTE

A lane test with Lane 2 selected will cause the REHEAT indication on the Maintenance Panel to be recorded.

Generally, Lane 1 is the preferred lane due to the auto change feature to Lane 2 in the case of a Lane 1 failure. Lane 2 will perform the same functions as Lane 1 and all operations are practically identical in both lanes. Following the lane test, a governor check shall be performed by selecting the governor test switch to NH and accelerating the throttles to MAX DRY. The NH will settle to approx. 85%. Retard the throttles to below 80% NH, and then select the governor test switch to NL. The RPM indicator NL flag will appear. Advance throttles to MAX DRY and the engine RPM indicators will settle at approx. 80% NL. This is the normal way to perform the governor check; however, if circumstances do not permit this high RPM check at the starting position of the aircraft, it may be done prior to take-off.

TAXI OPERATION
During taxi, the nozzle position may be selected to TAXI NOZZLE OPEN (100% Aj), reducing idle thrust by approx. 40%. Having selected TAXI NOZZLE OPEN, reverse thrust is inhibited while if reverse thrust is selected the selection of TAXI NOZZLE OPEN causes the retraction of the reverse thrust buckets. It should, however, be kept in mind that TAXI NOZZLE OPEN should be deselected before run-up and that a maximum of approx. 75% NH can be achieved with nozzle selected to TAXI NOZZLE OPEN due to mechanical interlock in the throttle box.

BEFORE TAKE-OFF
For the run-up before take-off select both throttles to MAX DRY and compare engine readings to placard values. TBT should be identical to placard on either phase but the TBT schedule (TBT at max dry as function of total inlet temperature TT1) may cause deviation in TBT of up to ± 15 degrees C in extreme temperature conditions. Thereafter min. reheat can be selected. Min. reheat nozzles on the ground will be at approx. 3%, then throttles should be advanced to MAX REHEAT and nozzles will indicate approx. 103%. The brakes will normally hold max reheat but if tire slippage is encountered brakes should be released and the engine indicators checked during the initial portion of the temperature take-off run. Tire slippage may occur on light weight take-offs or during very cold temperature operation. No further changes in engine parameters should occur during ground run.

AFTER LANDING
After landing, one engine may be shut down if desired, but the engine TBT should be less than 450°C. Before the shutdown of one engine, the cross-drive should be selected to AUTO to prevent loss of one hydraulic system.

Engine Handling in Flight

Dry and reheat handling in flight is straightforward and within the normal flight envelope of the aircraft no general limits should be encountered. However, extreme conditions such as high altitude, slams from IDLE to MAX REHEAT or engine operation under extreme loads, with, for example, single engine handling with cross drive engaged and simultaneous operation of wing sweep, may be encountered certain limits.

DRY OPERATION
Dry engine handling under normal conditions, i.e., at speeds above 200 kts, 1 g flight and operating both engines, is straightforward up to 40,000 ft. Acceleration rate will vary between 7% NH/ sec^2 on the ground and 2-3% NH/ sec^2 at 40,000 ft but as the idle NH is also increasing with altitude, the acceleration time to max dry is in the order of 4 sec. Certain extreme conditions, occurring singly or in combination, can cause engine surge (see figure). These conditions include:

- High AOA
- Low Airspeed
- High Altitude
- X-Drive Engaged
- Wing Sweep Operation
- Engine Slam Acceleration

Surges are characterized by loud single or successive bangs, or in the case of a locked in surge, a light rumble accompanied by stagnating or decreasing NH, increasing TBT, and no throttle response.
If a surge is encountered under any of these extreme conditions, it will normally not recover unaided. If the engine continues to surge, a reduction in AOA should clear the surge. A further possible method of clearing a surge, is to reduce the load on the engine, for instance, interrupting wing sweep operation. If the surge

continues, the engine should be throttled back slightly. If the engine remains in the locked in surge condition, further retardation of the throttle to idle is recommended. If still in surge, the engine should be shut down and a normal restart made.

REHEAT OPERATION
In reheat, the throttle position demands·an equivalent nozzle position, which in turn schedules the reheat fuel flow. Total temperature, altitude, HP compressor outlet pressure and turbine pressure ratio are additional parameters governing reheat operation. As a function of airspeed and altitude the min. reheat nozzle will open from the ground static condition of 32% to approx.75% at 40,000 ft, 250 KIAS. Similarly, the 100% ground nozzle at max reheat is reduced to a minimum of 85% Aj. When MAX REHEAT is selected on the ground at max dry, approx. 3.5 sec are required to achieve max reheat.
This time will increase to a maximum of 5 sec at extreme flight conditions. The primary parameter governing these functions is HP compressor outlet pressure (PE2) calculated by the CUE.
The turbine pressure ratio is the monitoring parameter for the reheat operation which signals automatic nozzle closure to normal dry area in the case of a RH blowout. In this case the throttles shall be retarded into the dry range before attempting a reselection of reheat. When reheat is deselected, 3.5 seconds are required for the nozzle to close completely. Thrust decrease is immediate and once the nozzle passes approx. 45% Aj reheat fuel flow is shut off completely. When reheat is cancelled the reheat fuel lines are purged and will be primed again during the next selection. After RH cancel an immediate reselection is permitted, but the light up sequence will start again only after a delay of approx. 5 seconds after RH fuel flow shut off to allow fuel lines purging. For repeated reheat operation within the normal flight envelope no limitations will be encountered, but on slams from IDLE to MAX REHEAT a reheat blow out and automatic nozzle closure may occur since the engine may be transiently on a limiter at the moment the nozzle starts to open. It is therefore generally recommended to let the engine fust come up to approx. max dry TBT's and then slam into MAX REHEAT. Good reheat light-up with this procedure is assured up to 40,000 ft within normal flying speeds. Slams from idle to max reheat will generally be accomplished without difficulty up to altitudes of 30,000 ft.

COMBAT OPERATION
No special limitations exist for selecting COM BAT and COMBAT will be easily achieved under all flight conditions where max reheat has been reached. It should be kept in mind that per sortie a maximum of 5 minutes combat may be used. A rise of approx. 15 degrees C in TBT will be observed when COMBAT is selected.

SECONDARY POWER SYSTEM

The secondary power system provides facilities for starting the engines on the ground and transmits mechanical power from the engines to various accessories.
The system, mounted in front of the engines and separated from them by a bulkhead, consists of two accessory gearboxes and an auxiliary power unit (APU), which is mounted on and drives the right-hand accessory gearbox. Each gearbox drives an integrated drive generator (IDG), a hydraulic pump and an engine fuel backing pump. Each gearbox may be driven by its associated engine through a freewheel clutch, or through the X-drive shaft from the other engine or drive its associated engine for starting purposes through a torque convertor.

AUXILIARY POWER UNIT

The APU is a gas turbine using aircraft fuel supplied from the RH feed line of the engine fuel supply system via the APU shut-off valve. The APU drives the right-hand gearbox.
In addition to providing torque for engine starting, the APU drives the aircraft generators and hydraulic pumps, thus providing facilities for aircraft system checkout.
Gearbox lubricating oil and hydraulic oil are cooled by fuel recirculating through coolers and back to the main fuselage tanks. On the right hand side, the fuel is cooled as it passes through the right hand air-cooled fuel cooler (ACFC), before its return to the tanks. An injector pump, powered by APU compressor bleed air, induces an airflow through this cooler via a bleed air valve which is controlled by the APU bleed switch on the rapid take-off panel.

APU Starting System

For starting purposes, the APU is fitted with a 28 V DC starter motor and an ignition system. The starting cycle is controlled by an automatic starting circuit. The APU may be started from an external 28 V DC ground power supply or with power derived from the aircraft's battery through the 28 V DC busbar PP4. In-flight operation of the APU is inhibited. An APU fire safety switch is located in the RH main landing gear compartment. It is used to prevent the APU from being started when work is performed on the secondary power system in the vicinity of the APU exhaust duct.
An air intake duct and shutter is installed in the RH side of the bay. When the APU starts, the shutter

automatically opens to admit outside air to the compressor intake. The shutter closes when the APU is shut down.
An APU fire warning system monitors the average temperatures in the vicinity of the APU. Should excessive temperatures be detected, the system will initiate visual (CWP) and audio warnings and shut down the APU by closing the APL fuel system shut-off valve.

Cross-Drive System

The right- and left-hand accessory drive gearboxes can be interconnected through the cross-drive shaft and a friction clutch, which is closed by oil pressure from the right hand gearbox oil pump or by an auxiliary oil pump driven by the cross-drive mechanism.
Normally the APU is started with the X DRIVE CLUTCH switch at OPEN and will therefore drive the right-hand gearbox only. However, if both gearboxes are required, the cross-drive clutch may be engaged by selecting AUTO either before or after the APU has started. The system shall not be run in this condition for long periods on the ground as only the right ACFC has an injector pump to prevent excessive fuel temperature.
With the X-DRIVE CLUTCH switch at AUTO, either engine may be started first from the APU. The APU will automatically shut down at approximately 60% NH and the second engine can then be started from the first. The cross-drive clutch shall be opened by pressing the X-DRIVE CLUTCH/ PUSH OPEN button after the second engine has reached self-sustaining speed. The cross-drive clutch will not then re-engage unless a difference in engine speed in excess of 15% NH is detected; in which case the clutch will engage and the amber SHUT indicator light illuminates. The cross-drive clutch will remain engaged until manually disengaged by pressing the X-DRIVE CLUTCH SHUT-PUSH OPEN button. If the engine speed differential is still in excess of 15% NH, the clutch will immediately re-engage. If the X-DRIVE CLUTCH switch is selected to OPEN the clutch will disengage and remain in this condition.
With the X-drive clutch closed, in the event of a gearbox overload condition, a speed difference between the gearboxes in excess of 4% NH lasting longer than 2.5 sec, will automatically open the X-drive clutch.

WARNING

AN ATTEMPT TO CLOSE THE CROSSDRIVE CLUTCH FOLLOWING LATCHING OPEN DUE TO AN OVERSPEED OR OVERLOAD CAN BE MADE EITHER BY PRESSING THE X-DRIVE CLUTCH LIGHT/ PUSH BUTTON WITH THE X-DRIVE CLUTCH SWITCH AT AUTO, OR BY SELECTING THE SWITCH TO OPEN AND BACK TO AUTO. THIS ACTION SHOULD ONLY BE TAKEN IN EMERGENCY.

SECONDARY POWER SYSTEM CONTROLS AND INDICATORS

The secondary power system (see figure) comprises the following controls:

APU Power Switch
A three-position toggle switch, located on the engine start panel, labelled APU POWER INT/EXT DC/EXT AC, selects the power source of the APU starter motor.

APU Switch
The APU switch is a three-position toggle switch, located on the engine start panel, marked APU-START/OFF, spring-loaded to the center position.

APU Run Light
On the engine start panel an amber light marked RUN illuminates when the APU is running with the APU BLEED switch in the OPEN position. The RUN light is flashing when the APU runs with the APU BLEED switch in the CLOSED position.

X-Drive Clutch Switch
The X-DRIVE CLUTCH switch is a two-position toggle switch, located on the engine start panel, marked X-DRIVE CLUTCH-AUTO/OPEN

AUTO position Clutch engages under certain conditions, e.g., speed differential > 15%

OPEN Position Clutch is disengaged.

X-Drive Clutch Shut/Push Open Button
A combined amber light /push button, marked SHUT - PUSH OPEN, is located on the engine start panel. The light is steadily illuminated while the cross-drive clutch is engaged. Pressing the push button disengages an engaged cross-drive clutch if speed difference is < 15% NHAPU Bleed Switch

The APU bleed switch is a two-position toggle switch, located on the rapid take-off panel, marked CLOSED/OPEN. The switch selects the position of the APU bleed air valve.

SECONDARY POWER SYSTEM (CONTROLS AND INDICATORS)

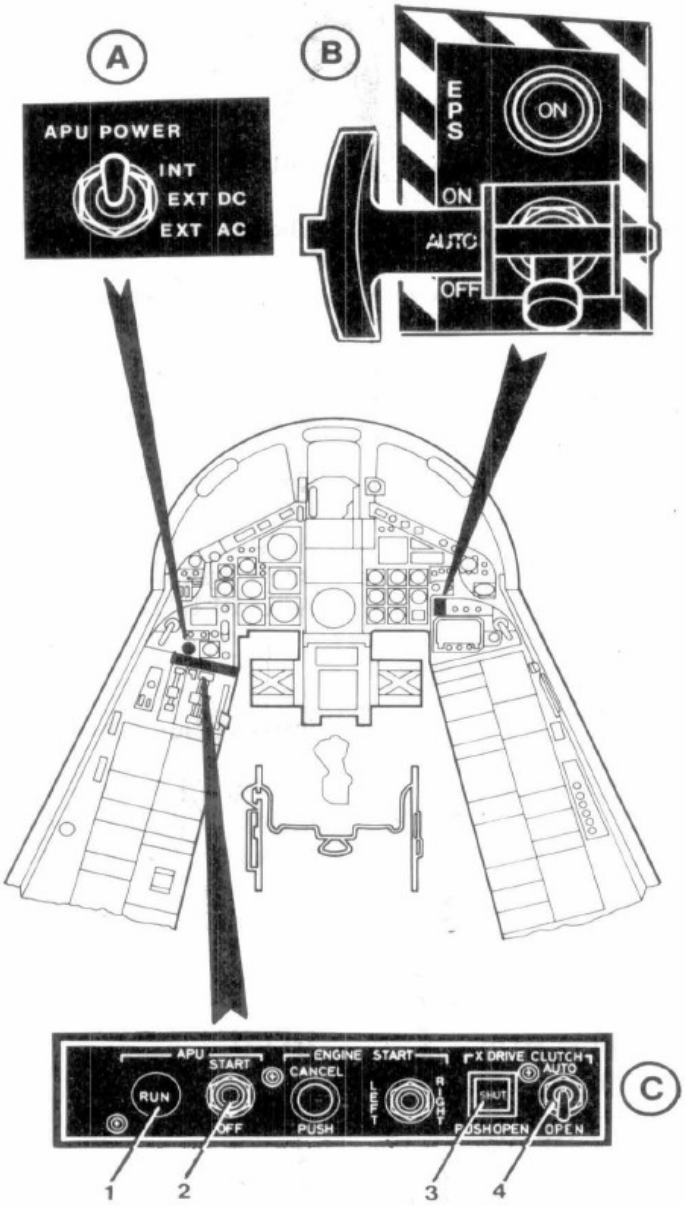

A APU Power Switch (Post Mod. 00011)

B Emergency Power System Switch

C Engine Start Panel

1 APU run light
2 APU switch
3 X-drive clutch SHUT/PUSH OPEN button
4 X-drive clutch switch

APU Auto Test Switch
The APU AUTO test switch is a two-position toggle switch, located on the engine test panel, marked TEST - NORM, spring-loaded to the NORM position. When TEST is selected the integrity of the APU fire warning system is tested.

NOTE

If the APU is running when the system is tested, APU shutdown occurs.

Central Warning Panel
On the CWP a red warning light APU illuminates in both cockpits when either an overheat or a fire is detected, and when the APU AUTO test switch is in the TEST position.

APU OPERATION

With 28 V DC power from the battery via battery busbar PP4 (or alternatively utilizing power from a 28 V DC external power source, connected to the aircraft), the BATT MASTER switch set to FLIGHT, the APU BLEED switch to CLOSED and momentarily depressing the APU switch to START, energizes the SPS control unit. The APU air intake shutter opens, the APU RUN light flashes, the APU main fuel valve closes. Simultaneously the starter accelerates the APU turbine assembly, and the ignition circuit will be activated. When ignition occurs, the turbine, assisted by the starter, accelerates to approx. 48% of nominal speed. At this point, the starter and ignition circuit is de-energized and the turbine continues to accelerate to approx. 60% of nominal speed, and provided that a compressor pressure of 1.3 bar is achieved, the igniter fuel valve closes and the A PU main fuel valve opens. Under normal conditions the time to reach maximum speed is approx. 15 sec, however, under extreme cold soak temperatures it may take up to 50 sec. If this time is exceeded, the APU will automatically shut down. The SPS control unit signals the APU clutch to engage and drive the RH gearbox. When the APU BLEED switch is selected to OPEN, the APU RUN light stops flashing but remains illuminated. If either engine is started, the APU will be shut down when that engine reaches approx. 60% NH.

NOTE

- To ensure adequate APU operation, the APU BLEED switch should remain in the CLOSED position until the APU turbine has reached nominal speed.

- If prolonged operation is required, the X-drive clutch and the APU BLEED should be selected OPEN to minimize APU load and to ensure adequate cooling airflow.

X-DRIVE OPERATION

For take-off and landing and light up to 5000 ft the cross-drive switch should be selected to AUTO to maintain all hydraulic services in case of engine failure. At low altitude, power take-off capability of the engine is such that even in case of a gear box seizure the live engine will not be influenced significantly, and shear necks in the gear boxes will before the engine RPM is dragged down.

EMERGENCY POWER SUPPLY (EPS) SYSTEM

In the event of a double engine flame-out or double generator/TRU failure, an EPS system provides hydraulic power for emergency operation of the taileron actuators at limited rate and/or electrical power for a DC fuel pump. The hydraulic component of the EPS consists of a DC motor driving a variable delivery hydraulic pump (EHP), assembled as a package. The package is installed in the left secondary power bay in parallel with the engine driven hydraulic pump of the aircraft left hydraulic system.
The DC emergency fuel pump is installed in fuel cell No. 6 and supplies fuel to the right engine fuel feed line. Both pumps are driven from a silver-zinc 25 V DC one shot battery installed in the fin area. The battery sustains sufficient power to drive the EHP and the DC fuel pump for 3 minutes or the DC fud pump alone for 7 minutes (Post mod 1 1019 20 minutes).

NOTE for Microsoft Flight Simulator:

EPS system controls and indications are present in the MSFS simulation, however the system is only partially simulated and in certain conditions it will not be capable to actuate flight controls.

Double Engine Flame-Out Case

In the case of a double engine flame-out, with the EPS switch in the AUTO position, and the WOG switch de-actuated, as both engine RPM's fall below 59% NH, the EPS system will be activated in the following sequence:

- The contactor between the one-shot battery and the EHP closes.
- The left hydraulic system utility isolating valve closes to conserve hydraulic pressure for operation of the tailerons.
- The X-drive clutch opens automatically.
- The engine crossfeed valve opens.
- The RCOV's drive to the ENG position.

At RPM < 50% NH:

- The generators go offline.
- The one-shot battery fires and will now supply power to the EHP and the DC fuel pump. Both pumps will come online after I or 2 seconds.

NOTE

With the EPS switch in the ON position the one shot battery will be activated irrespective of engine RPM and WOG position.

Normally an attempt to relight the right engine would be made first, within the engine operating envelope up to 30000 ft and a minimum RPM of 12% NH (Post mod. 01431: 14% NH). When the first engine reaches 59% NH, the X-drive clutch closes with the EPS in the AUTO position (if the EPS switch is in ON it shall be selected to AUTO). When the first engine speed exceeds 59% NH, the hydraulic pumps are pressurized, the left utility isolating valve opens and the EHP will be disconnected from the one-shot battery if in AUTO. Irrespective of the EPS switch position, the DC fuel pump will run u until the battery is exhausted.

Double Generator/TRU Failure case

If a double generator or a double TRU failure occurs, the DC busbars PP1 and PP2 will de-energize causing the one-shot battery to fire, driving the DC fuel pump only.

EPS System Controls and Indicators Switch

A three-position toggle switch (see figure) marked EPS - ON/AUTO/OFF, control the EPS system.
The switch is guarded in the OFF position by a safety pin when the aircraft is on the ground. The switch positions function as follows:

ON	With power on DC busbar PP3, the one-shot battery will fire immediately. The EPH and DC fuel pump will run. The fuel crossfeed valve opens, both RCOV's, will drive to the ENG position, the left-hand hydraulic system isolating valve closes, and the X-drive clutch receives an open signal.
AUTO	Automatic function of EPS is enabled if WOG switch is in the flight position.
OFF	EPS function is disabled.

NOTE

Caution should be exercised when selecting the EPS switch from OFF to AUTO. If the toggle is pulled, the switch may inadvertently enter the ON position resulting in EPS battery activation. It is not required to lift the EPS switch toggle when selecting between OFF and AUTO.

EPS System ON light

The EPS light (see figure) marked ON illuminates when the one-shot battery is supplying DC power, provided that the EPS switch is not in the OFF position.

FUEL SUPPLY SYSTEM

Fuel is carried in two fuselage tank groups and in the wings, external fuel tanks can be carried under the fuselage and the wings. All fuel is transferred to the fuselage tank groups before being fed to the engines, with the front group normally feeding the left engine and the rear group feeding the right engine and the APU. The fuel transfer sequence is automatically controlled but the normal sequence can be overridden by the pilot if required.
Fuel is transferred from the external tanks by air pressure and from the wing tanks by transfer pumps. Fuel is used as a cooling medium for hydraulic and lubricating oil, high temperature fuel being cooled by air being

returned to the tanks.
Fuel can be dumped overboard from the fuselage tank groups through an outlet in the fin. All external tanks are jettisonable.
Ground refueling is normally carried out from a single pressure refueling point, but the aircraft can also be gravity refueled.
Defueling can be carried out through the pressure refueling point or by suction through the gravity refueling points.
For fuel quantity refer to figure The aircraft is equipped for in-flight refueling. A hydraulically operated probe is fitted to the right side of the front fuselage and can be extended to receive fuel from a tanker aircraft. A floodlight is fitted to the refuel probe strut, to facilitate night refueling.

FUEL TANKS

Fuselage Tanks

The aircraft fuselage tank system comprises a front tank group of six cells, plus a wing box tank, and a rear tank group of ten cells.
The cells are made of tear-resistant bladder material except for two cells in the front tank group which are partially self-sealing. The wing-box tank forms part of the fuselage structure.
The cells in each group are interconnected by vent and transfer connections, and flap valves permit gravity fuel flow only towards collector boxes in each tank group. Each collector box houses a double ended boost pump with integrated non-return valves.
Negative G limitations are listed in Section V "Operating Limitations".
A transfer pump in the forward cell 1 b of the front tank group starts at low fuel conditions, and transfers fuel to the front collector box to prevent front boost pump starvation during dives and rapid deceleration.
The two tank groups are independent of each other, but can be interconnected through a valve, controlled by the TANK INTER - OPEN/CLOSE switch.

Wing Tanks

The wing tanks are an integral part of the wing structure.
The fuel contained in these tanks is transferred to the fuselage tank groups by dual transfer pumps at each wing tip, the left wing supplying the front group and the right wing supplying the rear group.

External Tanks

External subsonic fuel tanks can be carried on the inboard wing pylons and on the fuselage shoulder pylons. Fuel transfer from those tanks is achieved by pressurized air and automatically controlled by a level sensing system and transfer valves. Normally the left underwing and underfuselage tanks transfer to the front fuselage tank group and the right underwing and underfuselage tanks transfer to the rear fuselage tank group.

FUEL TRANSFER SYSTEM

AUTOMATIC TRANSFER

The aircraft is fitted with thermistor level sensors, which provide signals to the tank level sensing control unit. With the SEQUENCE switch on the fuel control panel (see figure) set to NORM, fuel is transferred from the external tank in the following sequence:

- Under-wing tanks
- Under-fuselage tank(s) (for asymmetric configuration see Manual Transfer, this chapter)
- Wing tanks
- External tank transfer is achieved by pressure-controlled fan bleed air.

This sequence is normally automatically controlled by level sensor in the individual tanks which selects the external tank transfer valves, and the pressure/vent valve (see "FUEL PRESSURIZATION AND VENT SYSTEM ") as required.
Fuel enters the fuselage tank groups through two fuel-pressure-operated combined refuel/transfer valves, one for each group. The shutoff piston of each valve is operated by servo fuel flow which is controlled by a high-level sensor in the associated. tank group. Whenever a tank group is full, the servo flow is shut-off by an integral solenoid valve, de-energized by the sensor.
Indication of the position of the external tank transfer valves and the state of the wing tank transfer pumps is given by two sets of four green indicator lights, located on the fuel control panel. The appropriate lamp

illuminates when the corresponding transfer valve is open or the corresponding transfer pumps are delivering pressure. If a transfer valve fails to close on completion of transfer, the associated lamp remains illuminate.
When the total fuel content is sensed at approx. 2050 ± 50 kg, the wing transfer pumps will be switched on and wing fuel will be transferred to the fuselage tank groups. The pumps will be switched off automatically when the tanks are empty provided that the SEQUENCE switch is in the NORM position.
When the contents of the forward tank group reduce to approx. 660 kg in level flight, a fuel pump in cell 1b is activated to transfer fuel to the collector box. At a fuel content approximately of 300 kg in either tank group, a low-level signal illuminates the amber FUEL caption light on the CWP in the front cockpit and opens the cross-feed valve, provided that the cross-feed switch on the fuel control panel is in the AUTO position.
The pump increases the inter-cell transfer rate to the front collector box, reducing the possibility of boost pump starvation due to a low fuel condition during dives and rapid deceleration.

FUEL CELLS ARRANGEMENT AND FUEL CONTENTS TABLE

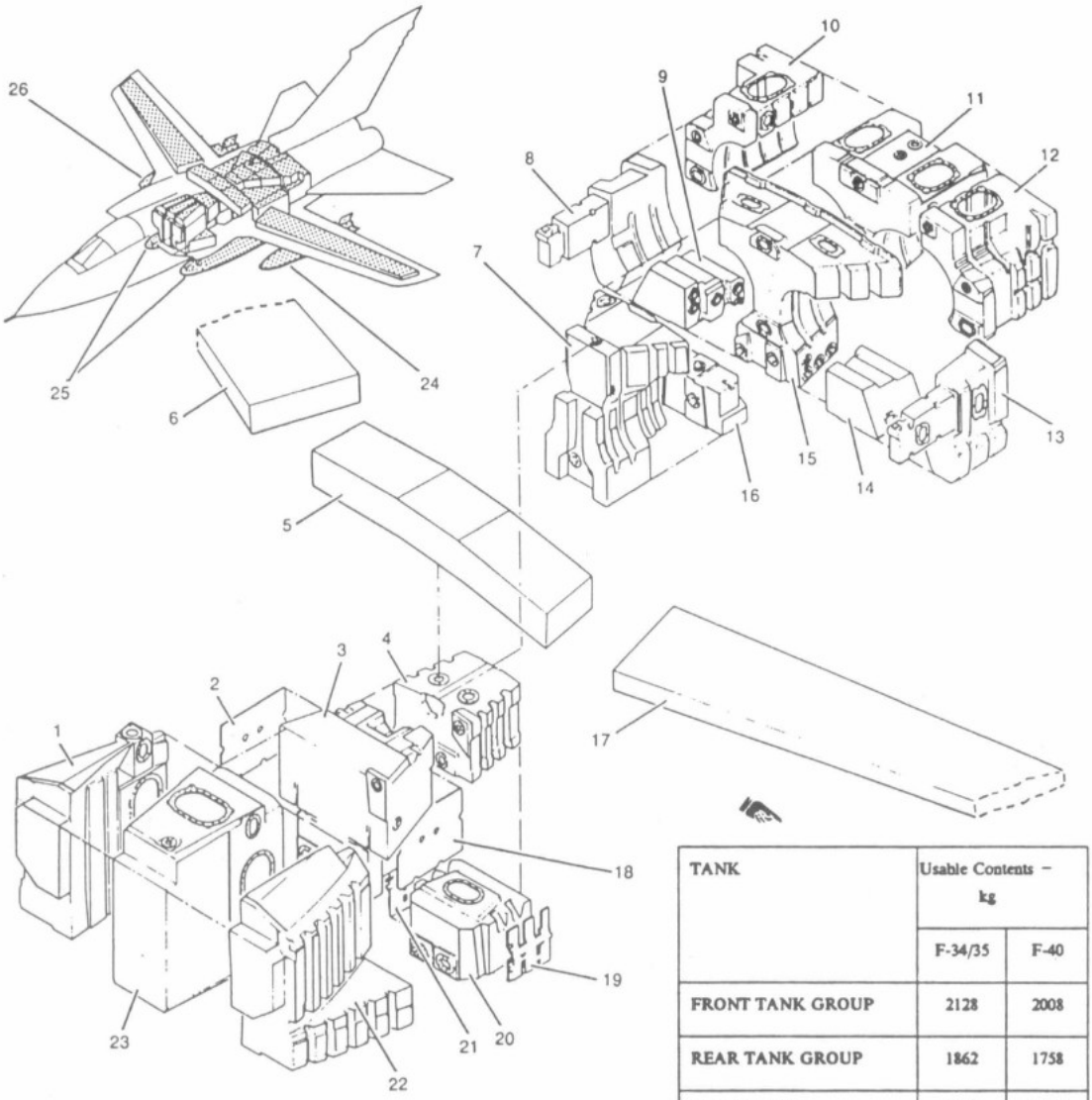

1 CELL 1C
2 BACKING BOARD
3 CELL 2
4 CELL 3
5 WING BOX TANK
6 WING TANK, RIGHT
7 CELL 5
8 CELL 12
9 CELL 8
10 CELL 10
11 CELL 11
12 CELL 9
13 CELL 13
14 CELL 7
15 CELL 6
16 CELL 14
17 WING TANK, LEFT
18 BACKING BOARD
19 BACKING BOARD
20 CELL 4
21 BACKING BOARD
22 CELL 1A
23 CELL 1B
24 EXTERNAL WING TANK, LEFT
25 EXTERNAL FUSELAGE TANKS
26 EXTERNAL WING TANK, RIGHT

TANK	Usable Contents – kg	
	F-34/35	F-40
FRONT TANK GROUP	2128	2008
REAR TANK GROUP	1862	1758
WING TANKS	782	738.4
AIRCRAFT TOTAL INTERNAL CONTENTS	4772	4504.4
EXTERNAL TANK (EACH)	1200	1132.5

NOTE

Fuel masses are based on the specific gravities as follows: F-34/35 0.800, F-40 0.755

MANUAL TRANSFER

Manual transfer is required in cases of:

- Automatic transfer failure
- Asymmetric external tank configuration
- B/B pod configuration (see B/B Refueling Pod Operation, this chapter)

Automatic Transfer Failure

The external tank transfer valves and wing tank transfer pumps can be controlled directly by the appropriate setting of the SEQUENCE switch which by-passes the level sensor in the selected tanks. The WG position of this switch disconnects wing tank transfer from the automatic sequence and switches on the wing transfer pumps.

NOTE

To avoid prolonged dry running of the wing transfer pumps after wing transfer has been completed the SEQUENCE switch shall be selected to NORM position.

Selecting U/FUS or U/WG will open the respective external tank transfer valve.
An alternative transfer route through the refuel sides of the main refuel/transfer valves can be selected by using the ALTER switch. When set to ALT this switch closes the transfer side of both valves by de-energizing the integral solenoid valves and selects the refuel side of both valves. Because of the refuel valve flow restrictor the transfer rate with ALT selected will be reduced.
External and wing tank fuel from both sides can be transferred into one fuselage tank group by use of the EMERG TRANS switch.
This switch selects a motor-driven reversible non return valve to the reverse position and also closes the transfer side of the main refuel/transfer valve for the non-selected fuselage tank group.
The fuselage tank group collector boxes can be interconnected via a tank interconnecting valve, controlled by the TANK INTER switch. With OPEN selected the tank group with the higher fuel level transfers to that with the lower fuel level at low rate. To ensure that both engines continue to receive a fuel supply during pitch attitude changes the TANK INTER switch shall be returned to CLOSED when the amber FUEL caution light illuminates (see figure)

Asymmetric Three Tank Configuration

The single U/FUS external tank may be carried on LH or RH shoulder station, which results in forward or aft tank group fuel imbalance respectively. The following fuel management should be utilized already prior to take-off.

U/FUS TANK ON SHOULDER STATION	TANK FUEL STATE	SEQUENCE SWITCH POSITION	EMERG TRANS SWITCH POSITION
LH	FULL	U/FUS	NORM
	HALF FULL		REAR
	EMPTY	NORM	NORM
RH	FULL	U/FUS	FRONT
	HALF FULL		NORM
	EMPTY	NORM	NORM

FUEL PRESSURIZATION AND VENT SYSTEM

The fuselage fuel tanks are pressurized by LP compressor bleed air regulated to a minimum of 14 kPa, and supplemented by ram air from an intake in the leading edge of the fm.
Bleed air for external tanks transfer is taken from the LP compressor and fed to the tanks at a controlled pressure of 105 kPa. On completion of external tank fuel transfer, the bleed air supply is shut off and the external tanks are connected to the fuselage tank pressurization system.
Fuselage tank pressure is restricted to max. of 38 kPa. Excess pressure is vented to atmosphere through an outlet in the fin trailing edge. A pressure switch senses the differential between fuselage tank pressure and ambient pressure which is derived from a tapping in the fuselage spine. Should this differential reduce to 3.45 kPa the switch closes and illuminates the amber VENT warning light on the CWP in the front cockpit.

FUEL COOLING SYSTEM

Fuel is used as a cooling medium for reheat vapor core pumps, hydraulic oil, and engine and accessory gearbox lubricating oils.
The reheat vapor core pumps are cooled by reheat servo fuel which is then fed hack to fuel mixing jet pumps in the engine feed lines upstream of the first stage pumps. Two fuel-cooled oil coolers are in-stalled in each engine feed line, one combined unit upstream of the forward reheat servo flow shut-off valve to cool hydraulic and accessory gearbox oils, and one downstream of the valve to cool engine oil. An air-cooled fuel cooler (ACFC) is installed in each fuel recirculation line. Cooling air is supplied by ram air intake and under certain flight conditions augmented by air ejectors driven by engine HP compressor 6th stage air, via a

combined shut-off/pressure reducing valve. This valve automatically opens when all the following conditions occur simultaneously:

- Engine speed less than 85% NH
- TR not selected.
- Fuel temperature in the engine feed line is 70 degrees C or more.

Excess fuel from each engine HP is normally returned to the pump inlet through a temperature-sensitive recirculation valve. When pump outlet temperature rises to 135 degrees C the valve starts to open and the excess fuel is fed back to a fuel-mixing jet pump in the appropriate tank group through an ACFC. The engine recirculation valve is fully open at 150 degrees C. A temperature sensitive switch activates the amber L or R FUEL T indication on the CWP in the front cockpit should pump outlet temperature rise to a preset limit.
An internal cooling circuit is included in each recirculation system to cater for APU and/or accessory gearbox operation when the associated engine is not running. The internal circuit operates automatically when the RCOV is driven to the INT position by the 59% NH signal as the engine runs down following HP cock closure.
Following engine start, as engine speed increases beyond 59% NH, the RCOV will be driven to the ENG position and open the normal recirculation circuit. The RCOV position ENG and INT are shown by the magnetic indicators on the ground servicing panel.
To improve fuel cooling, two air ejectors are provided on both ACFC. Each ejector is controlled through an automatic valve; it opens when the tanks fuel reach 70° C with the engines speed less than 85% NH. Opening of these ejectors is inhibited by deployment of the thrust reverser. When prolonged running of the APU is required an air flow can be induced through the right ACFC by an air jet pump which is controlled by the APU BLEED —CLOSED/OPEN switch.

ENGINE FUEL SUPPLY SYSTEM

Fuel is drawn from each fuselage collector tanks by two internal boost pumps and supplied to the engine fuel systems through fuel first stage pumps (see figure). In the event of the failure of any boost pump an integral pressure switch activates the appropriate F or R PUMP indication on the CWP in the front cockpit and a non-return valve closes to prevent fuel feeding back through the failed pump. Each engine feed line contains a check valve, which isolates the associated tank group in the event of leakage or damage, a first-stage pump driven by the accessory gearbox, and a forward reheat servo flow shut-off valve controlled by the appropriate LP COCKS switch.
If required, the two-engine feed system can be interconnected through a crossfeed shut-off valve which is selected by the CROSS-FEED —OPEN/AUTO/CLOSE switch. An amber OPEN light illuminates whenever the valve is not fully closed.
The APU is supplied by the right engine fuel feed system from a connection downstream of the first-stage pump. Fuel flow to the APU is through a shut-off valve controlled by the APU control unit. In the event of a double engine flame-out or a double generator failure an EPS system provides electrical power for a DC fuel pump.
The DC emergency fuel pump is installed in fuel cell n° 6 and supplies fuel to the right engine fuel feed line (refer to para–EMERGENCY POWER SUPPLY SYSTEM).

FUEL DUMP

Fuel can be dumped overboard from the fuselage tank groups by boost pump pressure through and outlet at the upper rear of the fin. External and wing tank fuel is transferred in the normal manner before being dumped. Fuel dumping is controlled by three shut-off valves, one for each tank group, and a master valve, each operated by an individual switch on the fuel control panel. Indicator lights on the panel show OPEN whenever the associated valve is open. Each fuselage group dump valve closes automatically when the contents of the associated group reduces to approximately 300 kg, or should pressure in the associated engine feed line reduce to approximately 1.3 bar (18.5 PSI); in both cases the valve is latched shut but, should valve closure be the result of a transient low pressure condition, dumping can be continued by selecting the appropriate switch to CLOSE then OPEN. If a low. pressure condition results from a double boost pump failure, fuel from the affected group can be dumped via the serviceable group at a reduced rate by selecting TANK INTER OPEN.

GROUND REFUELLING AND DEFUELLING

Refueling is normally carried out through a single pressure refueling point at the lower right side of the fuselage. The aircraft can also be gravity refueled through individual filler caps fitted to the fuselage tanks. During pressure refueling individual tank refuel/transfer valves are selected open by switches on a ground servicing fuel panel and are automatically closed by high-level sensors when tanks are full; indicator lights show the state of the valves. Closing the access door of the ground servicing fuel panel ensures that all switches are returned to the "flight" condition. Defueling through the pressure refueling point can be boost/transfer pump assisted or by suction. The aircraft can also be defueled by suction through the tank

filler caps. Defueling through the pressure refueling points is controlled from the ground servicing panel.

IN FLIGHT REFUELLING SYSTEM

Flight refueling can be carried out by means of a retractable probe. Flight refueling can be selected to all tanks or to internal tank groups only. The probe is normally extended and retracted hydraulically from the right hydraulic utilities system. In the event of electrical or hydraulic failure the probe can be extended by an emergency circuit powered from the left utilities system. Once the EMERG OUT selection has been made the probe cannot be retracted in flight. The probe is retained in the retracted position by a mechanical lock and in the extended position by a hydraulic lock. Probe position is indicated by an amber 1.5/1, lamp on the fuel control panel which illuminates whenever the probe is unlocked. A floodlight is mounted on the probe strut to facilitate night refueling. Lamp brightness is controlled by a switch in the rear cockpit, and the electrical supply to the lamp is through the OUT or EMERG OUT settings of the FLT REFUEL PROBE switch.
The green RDY lamp illuminates when the PROBE is selected to OUT or EMERG OUT, the transfer sides of both fuselage tank groups combined refuel/transfer valves are closed the pressure/vent valve is in the vent position and the depressurization valve is open. A TANKS switch selection of INT or ALL energizes the refuel sides of the fuselage tank groups combined valves and the wing refuel valves via a tank level sensing control unit which receives and amplifies signals from high and low sensors in all tanks. The refuel sides of the refuel/transfer valves are opened by fuel pressure following refueling drogue contact. The transfer sides are de-energized and closed by PROBE selection to OUT or EMERG OUT. During flight refueling fuel is fed to the fuselage tank groups through the refuel sides of the refuel/transfer valves and to the wing tanks through wing tank refuel valves.
When the tanks are full the servo-flow controlling the valves are shut-off when the integral solenoid valves are de-energized by the tanks level sensing control unit, through signals from the high-level sensors. The green FULL indicator, on the right anti-glare shields, illuminates when all tanks are full as detected by the high-level sensors, and extinguishes when the TANKS switch is set to OFF. Setting the PROBE to IN extinguishes the RDY indicator, closes the depressurization valve and operates the pressure/vent valve to pressurize the external tanks. Fuel transfer is then controlled by the tanks level sensing control unit. When the fuel in either fuselage tank group reduces by 50 kg the transfer side of the associated combined refuel/transfer valve will open by transfer pressure.

NOTE

- If after refueling the TANKS switch is not selected to OFF, fuel transfer to the fuselage tank groups will occur through both sides of the combined refuel/transfer valves.
- The PROBE switch will always be set to IN following completion of refueling.
- If after selection of PROBE switch to OUT or EMERG. OUT positions the FR VLV caption on CWP is illuminated, the transfer side of the fuselage refueling/transfer valves are open and the refueling shall be accomplished at a reduced pressure to avoid damages at the fuel cells.

"BUDDY-BUDDY" (B/B) REFUELLING SYSTEM

The B/B refueling system consists of an aircraft used as a tanker, equipped with a self-contained refueling pod and a receiver aircraft, equipped with the refueling probe, to transfer fuel by the probe-and-drogue method.
The B/B refueling pod can be installed on the centerline station only with MWCS suspension system.
The pod has a fuel capacity of 880 kg (usable 845 kg) and is capable of pumping fuel to the receiver aircraft at a rate of 300 to 720 kg/min, depending on the configuration and the fuel level in the receiver aircraft's tanks.
Fuel can be also transferred from the tanker aircraft's fuel system through the pod to the receiver aircraft, or from the pod back to the tanker's fuel system (see figure).
The system main components are:

Tanker Aircraft
B/B refueling Pod, consisting of:

- Ram Air Turbine
- Hydraulic Pump
- Fuel Pump
- Hose Reel Assembly
- Refueling Assembly
- Pod Signal Lights

Refuel Control Panel
Switching and Indicator Elements on Fuel control Panel

Receiver Aircraft
Refueling Probe
Switching and Indicator Elements on fuel Control Panel

The B/B refueling pod is normally pressure refueled via the tanker's fuel system but may be gravity refueled through a filler cap on top of the pod. The aircraft's boost pumps are used to transfer fuel from the internal fuel system via the dump valves into the pod's fuel cell. The pod can be pressurized in a similar manner to a normal external fuel tank, to transfer the fuel back into the tanker's fuselage tank groups. A ram air turbine on the nose of the pod (consisting of a propeller, a governing mechanism, and a solenoid operated brake) drives a hydraulic pump. The pump provides hydraulic power to the fuel pump and the hose reel motor. A 15-meter-long fuel hose is stowed on a drum in the tail of the pod. During refueling operations, the hose will be extended from or retracted onto this drum. The hose bears white markings at certain intervals along its length. These marking indicate to the receiver pilot the amount of hose extended from the pod A refueling assembly attached to the end of the fuel hose contains a reception coupling (consisting of a paradrogue of 710 mm diameter and a wind-driven generator). During refueling operation hose tension is maintained automatically.
In the event of a failure which precludes hose retraction, the hose can be jettisoned by a guillotine mechanism.

NOTE for Microsoft Flight Simulator:

The Buddy-Buddy Refuelling system is not implemented in the MSFS rendition. This paragraph is provided for information and educational purposes only.

Pod Signal Lights

A set of three colored lights on each side of the pod's tailcone indicate to the receiver aircraft the mode of operation existing within the pod.
The lights function in unison with the SIGNAL LIGHTS on the REFUEL control panel, as follows:

- Amber lights — The hose is extended, and the pod system is ready for receiver engagement and fuel transfer.
- Green lights — Fuel is flowing from the pod to the receiver aircraft.
- Red lights — Steady illumination; the hose is extending or retracting therefore the pod is not ready for refueling.

Flashing

- Signal to the receiver not to engage on the drogue.
- During refueling, signal to break contact immediately A REFUEL control.

A REFUEL control panel (see figure) is located on the rear cockpit left hand console and will be installed when the aircraft adopts the tanker role.

FUEL SYSTEM CONTROL AND INDICATORS

Fuel Flow Indicator

The fuel flow indicator (see figure) calibrated in kg/min, has two pointers, marked L and R, which indicate the dry power fuel flow to the left and right engine respectively.

Fuel Quantity Indicator/Selector Unit

An indicator (see figure) has two pointers marked LF (left/front) and R (right/rear), which normally indicate fuselage tanks front and rear group fuel quantities between 0 and 2200 kg. When a button on the panel below the indicator glass is pressed the pointers indicate fuel quantity in the tank selected. The indicator incorporates a digital counter which indicates total fuel remaining in divisions of 100 kg. This digital counter is covered by an off flag when the electrical power is switched off. A TEST button, when held pressed resets the fuel quantity indicator pointers and the digital counter to zero. Any position other than zero indicates a malfunction.
Each of the four push buttons when held pressed selects the associated tank fuel quantities to be indicated by the quantity indicator pointers. The push buttons are marked:

C/FUS	Center fuselage tank only. One pointer superimposed on the other act together as one pointer.
U/FUS	Left and right under-fuselage tanks.
WING	Left and right wing tanks.
U/WING	Left and right under-wing tanks.

Rapid Take-Off Panel

The rapid take-off panel (see figure) contains the following fuel system controls:
Two two-position toggle switches marked FUEL BOOST PUMPS — FRONT/REAR, which control the operation of the front and rear fuselage tank group boost pumps.
A two-position toggle switch marked APU BLEED — CLOSE/OPEN, which control the operation of the jet pump in the right ACFC.

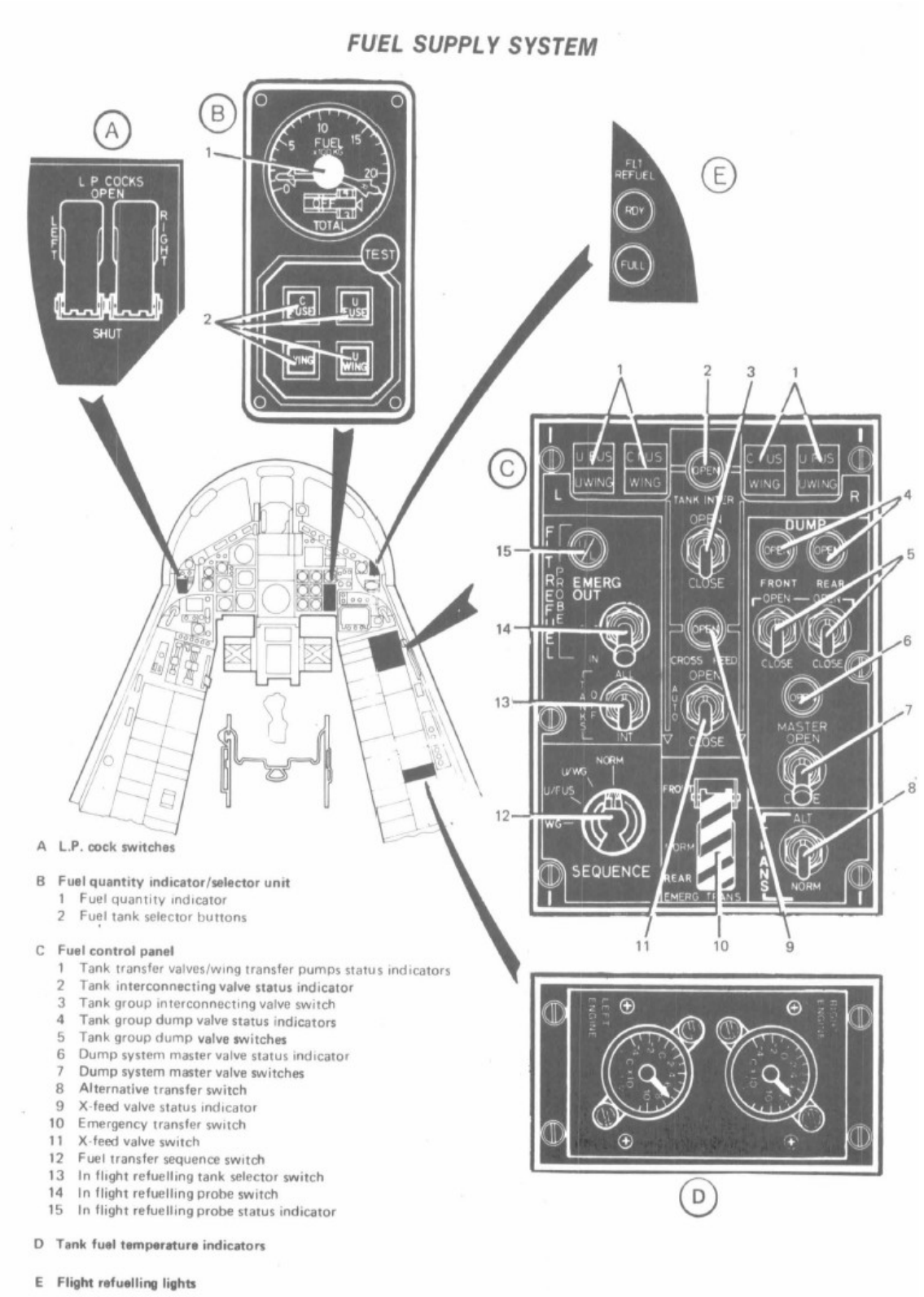

Central Warning Panel

The CWP in the front cockpit contains the following fuel system warning indications:

- RED caption FUEL (both cockpits) indicates a low fuel content (approx. 50 kg) in the collector box (forward group)
- AMBER captions FUEL indicates that fuel quantity in either fuselage tank group is approximately 300 kg or less (both cockpit)
- L FUEL T and R FUEL T indicate that the fuel temperature at the left and right engine fuel pump outlet exceeds 150° C
- F PUMP and R PUMP indicate a failure of one or both boost pumps in the front and rear fuselage tank groups
- VENT indicates a drop in fuselage tank differential pressure to below 3,5 kPa.
- FR VLV indicates, that, with the probe selected OUT or EMERG OUT, one or both fuselage tank group transfer valves are open.

Fuel Control Panel

The fuel control panel (see figure) contains the following controls and indicators:
TANK TRANSFER VALVES / WING
TRANSFER PUMPS STATUS INDICATORS

Two sets of four green lights labelled L and R and marked U FUS/C PUS/U WING/WING, indicate the state of the external tank transfer valves and the wing tank transfer pumps.
U FUS Illuminates when left or right under-fuselage tank transfer valve is open or not fully closed.
C FUS Illuminates when the centerline tank transfer valve is open or not fully closed
U WING Illuminates when left or right under-wing tank transfer valve is open or not fully closed
WING Illuminates when left or right wing tank transfer pumps delivery pressure above 28 kPa ± 7
TANK GROUP INTERCONNECTING VALVE SWITCH
TANK INTER — OPEN/CLOSE switch is a two-position toggle switch which controls the operation of the fuselage tank group interconnecting valve.

TANK INTERCONNECTING VALVE STATUS INDICATOR
An amber OPEN indication marked TANK INTER which illuminates whenever the fuselage tank interconnecting valve is open or not fully closed.

TANK GROUP DUMP VALVE SWITCHES
Two two-position toggle switches with positions FRONT — OPEN/CLOSE and REAR —OPEN/CLOSE, marked DUMP, which control the fuselage tank group dump valves.
TANK GROUP DUMP VALVE STATUS INDICATORS
Two amber OPEN indications, marked DUMP, which illuminate whenever the associated fuselage tank group dump valve is open or not fully closed.

DUMP SYSTEM MASTER VALVE SWITCH
A two-position latch toggle switch marked MASTER with positions OPEN/CLOSE controls the dump system master valve.

DUMP SYSTEM MASTER VALVE STATUS INDICATOR
An amber OPEN indication, marked MASTER, illuminates to indicate that the dump system master valve is open or not fully closed.

ALTERNATIVE TRANSFER SWITCH
A two-position toggle switch marked TRANS with positions NORM/ALT to select the refuel side of the main refuel/transfer side of the valves.

EMERGENCY TRANSFER SWITCH
A three-position toggle switch marked EMERG TRANS with positions FRONT/NORM/REAR guarded at NORM by a black and yellow striped guard. The switch serves to select transfer of all external and wing tank fuel to one fuselage tank group.

FUEL TRANSFER SEQUENCE SWITCH
A four-position rotary switch, marked SEQUENCE, provides a manual control of the fuel transfer sequence with the following settings:

- WG Wing tank transfer pumps selected on
- U/FUS Under-fuselage tank transfer valves selected open.

- U/WG Under-wing tank transfer valves selected open.
- NORM External tank transfer valves controlled by low-level sensors. Auto hold wing system enabled.

X-FEED VALVE SWITCH
A three-position toggle switch, marked CROSS-FEED — OPEN/AUTO/CLOSE selects the mode of operation of the crossfeed valve:

- OPEN Crossfeed valve selected open.
- AUTO Crossfeed valve automatically opened when fuel quantity in either fuselage tank group falls to approximately 300 kg.
- CLOSE Crossfeed valve selected closed.

X-FEED VALVE STATUS INDICATOR
An amber OPEN indication marked CROSSFEED illuminates whenever the crossfeed valve is not closed.

IN-FLIGHT REFUELLING TANK SELECTOR SWITCH
A three-position toggle switch marked TANKS — ALL/OFF/INT, to select the appropriate tank group fuel valves open for inflight refueling.

NOTE

When selecting INT the fuselage and wing tank refuel valves open for in-flight refueling.

IN-FLIGHT REFUELLING PROBE SWITCH
A three-position latch-toggle switch, marked ELT REFUEL PROBE — IN/OUT/EMERG OUT, controls flight refueling boom extension and retraction.

- **IN** Boom selected retract
- **OUT** Boom selected to extend by normal hydraulic supply.
- **EMERG OUT** Boom selected to extend by emergency hydraulic supply. After selecting EMERG OUT the boom cannot be retracted when selected in

IN-FLIGHT REFUELLING PROBE STATUS INDICATOR
An amber U/L indication illuminates whenever the flight refueling boom is not locked in.

Tank Fuel Temperature Indicators

Two indicators (see figure) in the front cockpit are provided to monitor the temperature of the fuel of both tanks' groups.

LP Cocks Switches

The LP cocks switches (see figure) are two two-position toggle switches, marked LP COCKS — LEFT/RIGHT — OPEN/SHUT, guarded to the OPEN position by red covers. Each switch controls the operation of one 1, P valve and reheat servo shut-off valve.

Refuel Control Panel

The refuel control panel (see figure) contains the following controls and indicators.

HOSE JETTISON SWITCH
A two-position toggle switch with the positions HOSE JETT/OFF; and guarded in the OFF position by a black and yellow striped guard. The switch initiates emergency jettison of the fuel hose.

FUEL GONE INDICATOR
The indicator is marked FUEL— GONE — KG and shows the amount of fuel transferred to the receiver aircraft. The four-digit readout registers in 10 kg increments.

FUEL GONE INDICATOR RESET PUSHBUTTON
Pressing the pushbutton, marked RESET, the fuel gone indicator resets to 0000.

FUEL INDICATOR DIMMER CONTROL
The brightness of the fuel gone indicator display can be adjusted by the dimmer control, marked DIM.

REFUEL CONTROL PANEL

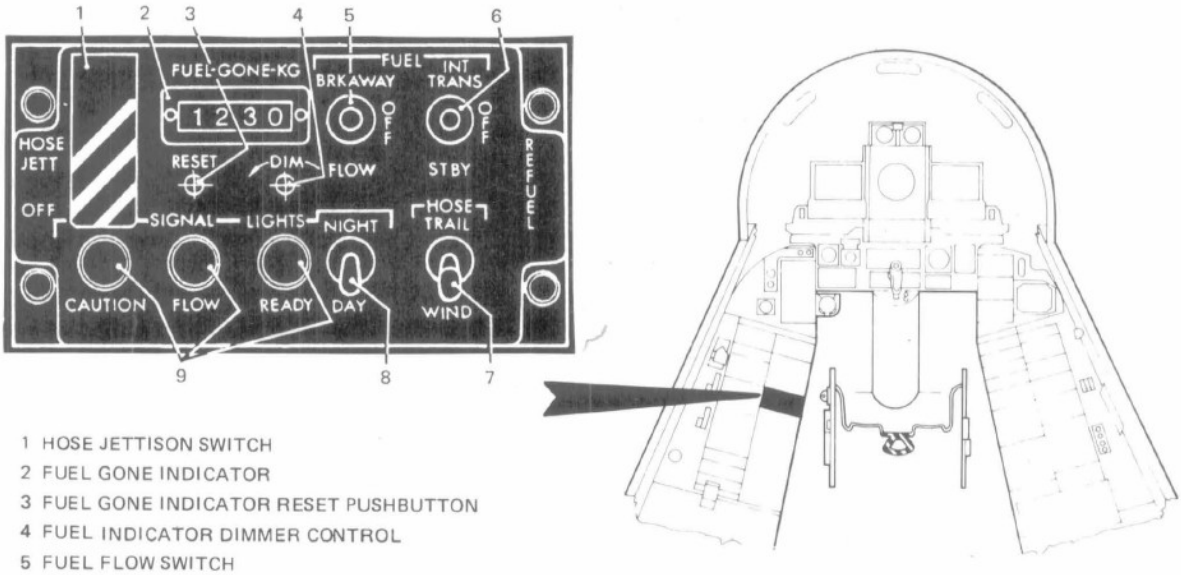

1 HOSE JETTISON SWITCH
2 FUEL GONE INDICATOR
3 FUEL GONE INDICATOR RESET PUSHBUTTON
4 FUEL INDICATOR DIMMER CONTROL
5 FUEL FLOW SWITCH
6 FUEL MASTER SWITCH
7 HOSE OPERATING SWITCH
8 POD SIGNAL LIGHTS DIMMER SWITCH
9 SIGNAL LIGHTS

FUEL FLOW SWITCH
The three-position lock toggle switch marked FUEL with the positions BRK AWAY/OFF/FLOW, controls the operation on the fuel pump.
The toggle shall be lifted to move it from the OFF position.

BRK AWAY => CAUTION lights and the pod's tail cone and the SIGNAL LIGHTS — CAUTION on the REFUEL control panel flash and fuel pump stops regardless of mode of operation
OFF Fuel pump is not running.

FLOW=> With the fuel master switch in the STBY position, the fuel pump delivers fuel to the receiving aircraft, provided that the integral fuel flow switch circuits are energized.

FUEL MASTER SWITCH
The three-position toggle switch is marked FUEL with the positions INT TRANS/OFF/STBY

INT TRANS The pressure vent valve opens, and the pod will be pressurized and used as a centerline tank.
OFF Ram air turbine blades are feathered, and the hose reel drum is mechanically locked
STBY The propeller blades of the turbine unfeather, and in flight it operates the hydraulic pump.

NOTE

In the position OFF and STBY no automatic closure of the B/B pod transfer valve after automatic wing hold release will occur.

HOSE OPERATING SWITCH
A two-position lock toggle switch with the positions TRAIL/WIND, is used to unwind or retract the fuel hose. When set to TRAIL the floodlight on the tailcone illuminates.

POD SIGNAL LIGHTS DIMMER SWITCH
A two-position toggle switch is marked SIGNAL LIGHTS with the positions NIGHT/DAY and controls the pod's signal lights intensity for day or night operation.

SIGNAL LIGHTS

A red SIGNAL LIGHTS — CAUTION light illuminates while the fuel hose is extending or retracting. If the hose is fully extended, or if the drogue is stowed, the CAUTION light extinguishes.
The amber SIGNAL LIGTHS — READY light illuminates when the fuel hose is extended, and the system is ready for contact. It extinguishes when contact has been made and the pump is pumping fuel to the receiver aircraft.
The green SIGNAL LIGHTS-FLOW light will be illuminated by a signal from the FUEL, GONE indicator after the fuel begins to flow from the pod to the receiver aircraft.

Floodlight

A floodlight mounted on the tail cone illuminates the underside of the tanker aircraft for night refueling operations.

Flight Refueling Lights

The flight refueling lights (see figure) comprise a green RDY indication which, with the probe selected OUT or EMERG OUT indicates that both fuselage group transfer valves are closed and the pressure vent valve is set to vent. A green FULL indication illuminates when INT is selected, and the fuselage and wing tanks are full, or ALL is selected, and all fuel tanks are full.

NOTE

The absence of the ready light implies either, that the pressure/vent valve is not in the vent position, with the result that the external tanks will fill at a lower rate, or that the depressurization valve in the fin is not open, resulting in a lower internal tanks to fill rate.

Refuel Probe Light Control
The refuel probe light control is a rotary dimmer switch marked REFUEL PROBE LIGHT and is located in the rear portion of the rear cockpit right hand console (see figure). With the probe selected OUT or EMERG OUT it controls the in-tensity of the flight refueling probe floodlight.

B/B REFUELLING POD OPERATION

NOTE for Microsoft Flight Simulator:

The Buddy-Buddy Refuelling system is not implemented in the MSFS rendition. This paragraphs is provided for information and educational purposes only.

Selecting the fuel master switch to STBY will un-feather the propeller of the ram air turbine. Turbine rotation drives the hydraulic pump which builds up internal system hydraulic pressure, which subsequently unlocks the drum but the drogue remains stowed. Drogue extension starts after the hose operating switch set to TRAIL.

- The drogue ejects into the airstream by the force of an ejection spring, and the hose unwinds.
- Simultaneously the underside of the tanker aircraft fuselage will be illuminated by the floodlight located on the pod's tail, and
- The red CAUTION light on the pod's tailcone on the REFUEL control panel illuminate while the hose is extending.

When the hose has reached the fully extended position, the SIGNAL LIGHTS — READY light illuminates and the CAUTION light extinguishes. Power from the wind-driven generator will illuminate the four position lights on the brim of the drogue.
After the receiver aircraft has made contact, fuel flow is provided only if the fuel flow switch is in the FLOW position and the receiver aircraft has pushed the hose about 1.5 meters towards the tanker aircraft so that the integral fuel flow switch circuits will be energized.
The amber SIGNAL LIGHTS READY extinguishes, the fuel pump runs, the fuel gone indicator registers the fuel transferred and the green SIGNAL LIGHTS — FLOW light illuminates.
During refueling the reel is servo-controlled by hydraulic pressure which is proportional to the hose load.
An increase in hose load causes a trail signal, while a decrease in hose load causes a wind signal.
If fuel supply from the internal tank groups to the pod's fuel cell is required, the fuselage internal tank group dump switches, labelled DUMP — OPEN/ CLOSE on the fuel control panel shall be set to OPEN. The pod will then be replenished at a rate of 325 to 360 kg/min until the pod high level sensor operates (pod full).

Fuel transfer to the receiver aircraft will be terminated automatically when:

- The receiver aircraft's tank is full by closing of its internal fuel shut-off valves

NOTE

If the fuel transfer rate exceeds the rate at which the pod is replenished, it is possible that fuel transfer will be interrupted by the pod low level sensor. However, transfer will recommence when the pod low level sensor is again wetted.

- A pod empty signal is sensed by the pod low level sensor.
- The internal fuel flow switch circuits de-energize.

To stop fuel transfer manually at a desired fuel quantity, the fuel flow switch on the REFUEL control panel shall be switched to OFF.
When the fuel pump stops running, the SIGNAL LIGHTS-FLOW light extinguishes and the SIGNAL LIGHTS-READY light illuminates.
After refueling, the tank group dump switches shall be selected to CLOSE.

Placing the fuel flow switch to OFF and the hose operating switch to WIND will:
- Extinguish the SIGNAL LIGHTS — READY light.
- Illuminate the SIGNAL LIGHTS — CAUTION light.
- Extinguish the floodlight.
- Rewind the hose reel drum.

After retraction of the hose, the SIGNAL LIGHT-CAUTION extinguishes, and the fuel master switch shall be set to OFF if fuel transfer is completed. The blades of the ram air turbine feather.

Automatic Hose Rewind

Changes in airspeed exceeding a certain amount may result in automatic hose rewind, which will not be indicated to the aircrew.

Breakaway

In an emergency case the tanker aircraft can signal the receiver aircraft pilot not to engage or to break contact, by placing the fuel flow switch to BRK AWAY causing the SIGNAL LIGHTS CAUTION light to flash. The fuel pump is disabled regardless of the pod operation mode.

Hose Jettison

In the case of a hose rewind failure or abnormal behavior of the hose, it can be cut by a guillotine mechanism. By lifting the cover guard and placing the hose jettison switch to HOSE WIT, the ram air turbine feathers, hydraulic pressure decays, the hose reel drum locks and a cartridge fires the hose guillotine.

CAUTION

THE GUILLOTINE CARTRIDGE WILL FIRE AT ANY TIME THE HOSE JETTISON SWITCH IS SELECTED TO HOSE JETT AND DC BUSBAR PP3 IS ENERGIZED.

Internal Transfer

Pod fuel may be utilized for the normal tanker's engine supply, with fuel transferred in the same way as a centerline tank fuel.
With the fuel master switch selected to INT TRANS the pod will be pressurized from the engine LP compressor bleed and fuel transfers to the fuselage tank groups with a rate of 63 to 150 kg/min, depending on aircraft altitude and throttle setting, if:

- Underwing tanks are empty.

- Auto wing hold release point has not been reached.

I
f during pod fuel transfer the auto wing hold release point is signaled, transfer will be interrupted but will recommence when both wing tanks are empty. On completion of pod fuel transfer (pod low level sensor signal or de-selection of INT TRANS), the LP compressor bleed air ceases and the pod remains pressurized from the normal fuselage tank pressure.

ELECTRICAL POWER SUPPLY SYSTEM

The Electrical Power is provided by two Integrated Drive Generators (ID(i) that supply a three-phase, 115/200V, 400 HZ AC system. DC: loads are supplied from the AC system via two Transformer —Rectifier Units TRU) and a battery charger. A 24V, 36 AH battery provides power for independent APU starting and for the essential services in the event of failure. On the ground, the system can be supplied from an external supply unit via an AC ground power connector, and a DC ground power connector is provided for APU starting.

AC SYSTEM

The AC busbars are supplied by two generation channels normally operating in parallel. Each channel consists of an IDG and an associated Generator Control Unit (GCU) which provides control and protection facilities, monitors the system condition and controls the busbars interconnection. A three busbars system supplies the aircraft AC utilities. Two main busbars XP1 and XP2 are connected via contactors to the left (XP1) and the right (XP2) generator respectively. The third busbar (XP3) is directly connected to XP2. Busbar XP1 is connected to XP2 by an AC Busbar Tic Contactor. This contactor is controlled by both GCUs, in normal operations it is constantly in closed position. The Busbar Tie Contactor is provided to supply the busbar of the failed generator in case of single generator failure.

Integrated Drive and Generator Unit

The accessories gearbox of each engine drives an IDG consisting of a constant speed drive unit and a generator. The generator is rated continuously at 40 KVA, at 60 KVA for two hours and at 70 KVA for five minutes. Oil for constant speed drive operation and for generator cooling is taken from the associated gearbox. The generators are normally operated in parallel, though each is capable of supplying the total aircraft load. If necessary, both generators can be driven from one engine or from the APU, via the gearbox cross-drive system. The APU may shut down due to overloading if driving both gearboxes under maximum load conditions. Excitation, regulation and protection facilities for each generator are provided by the associated GCU which activates the system failure warnings when necessary, and controls a generator contactor in the line between the generator and its busbar. Each GCU monitors the condition of its associated channel: both GCUs control the AC busbar tie contactor and activate the failure warnings if a high load difference occurs during parallel channel operation.
During APU start, with the crash bar set to rear (Pre Mod. 01655) and Generator switches ON the right GCU energizes its generator contactor when the right generator reaches normal operating speed. The right generator is thus connected to the XP2 and XP3 AC busbar and the Right Fail light on the engine control panel and the CWP red AC caption go off. The GCU then closes the AC busbar Tie contactor to interconnect the XP1 and XP2 AC busbar, allowing the right generator to supply all AC loads. Since the DC supplies are derived from
the AC system, both TRU and the battery charger come online and the DC warnings go off.
When the left generator reaches normal operating speed, and provided that conditions for paralleling are correct, the left GCU energizes its generator contactor to connect the left generator to the XP1 AC busbar; the Left Fail light on the engine control panel and the amber GEN caption on MVP go off. Provided that conditions for paralleling are correct, the AC bus bar tic contactor remains closed. The generators are thus operating in parallel to supply all AC busbar.

DC SYSTEM

The DC power distribution system comprises two main busbars (PP1 and PP2), which are interconnected through protective fuses, and essential busbar (PP3), a battery busbar (PP4), and a maintenance busbar (PP5). Each TRU feeds one main busbar and the essential busbar while the battery busbar is normally supplied from a battery, assisted by a battery charger. Each TRU is capable of supplying the total DC demand. The maintenance busbar PP5 is supplied from the battery busbar PP4 via the crash switch.
A DC battery contactor and its associated control circuit ensures that the DC essential busbar remains live following a double TRU. failure and provides facilities for supplying the essential services before the APU is started when ground AC power is not available.
Following a double TRU failure, a fast action device consisting of a silicon controlled rectifier (SCR) and associated control circuitry, ensures the minimum power interrupt to essential equipment and causes the battery busbar contactor to close. If the SCR fires but the battery busbar contactor remains open, its closure is ensured by a battery contactor relay, which is wired in parallel with the fast action device.
Normally the battery busbar contactor is held open by a correct output from either TRU. This isolates the battery busbar from the power demands on the rest of the system and thus the battery will be rapidly recharged.
On the ground if external AC power is not available, the DC battery contactor is closed when the BATT

MSTR switch on the rapid take off panel is set to FLIGHT and is opened automatically when the first TRU comes online.

Transformer—Rectifier Units

Each TRU produces two electrically isolated 28V DC output from a three-phase, 200V 400 Hz AC input. One output from each is connected directly to the DC essential busbar and the second feeds the interconnected PP 1 and PP2 DC busbar. Each output is capable of supplying loads up to 150A provided that the total load on a TRU does not exceed 200A. Below these limits the outputs are maintained at a nominal 28V DC by an internal current monitor which also feeds "output correct" signals to the contactor control relay and "output incorrect" signals to the failure warnings. Each TRU is cooled by an internal fan.

Battery

A 24V, 36 All battery is connected to the battery busbar (PP4) directly and to the Maintenance busbar (PP5) via the crash bar. It provides power for ground maintenance, independent APU starting, and for the essential DC services, whenever TRU output is not available. The battery incorporates sensors which are connected to the charger regulation circuit. The battery is ventilated by air taken from the equipment bay cooling system.

Battery Charger

The battery charger is basically a TRU which produces a DC output from a three-phase, 200V, 400Hz AC input. The output voltage level is determined by the battery sensor and the unit is capable of supplying loads up to a maximum of 45 to 55 A. The charger is supplied from the XP3 AC busbar and output is connected to the battery busbar. Internal protection circuit switches off the charger in the event of overvoltage, loss of input power, loss of output and overheating; the unit is automatically re-energized if the fault condition subsequently disappears. The battery charger is cooled by air taken from the equipment bay cooling system.
Voltmeter (Post Mod. 01662)
A voltmeter is fitted on the right consoles in the rear cockpit. The instrument is connected to the Battery busbar (PP4), it therefore indicates either the output voltage of the battery charger or the battery voltage when the battery charger is not operating.
The instrument is divided into four colored sectors, namely:

Red 10V to 24V
Possible battery charger failure (if both engines are running) or battery voltage too low level (if both engines are not running).

Amber 24V to 28V
Battery voltage low level (if both engines are not running).

Green 28V to 32V
Normal operating condition

Red 32V to 35V
Excessive output of battery charger due to a failure of the battery charger control circuit or to damaged battery cells.

NOTE

When in flight, the voltmeter normally pulses between 29V to 31V.

EXTERNAL POWER SUPPLY

The external AC power receptacle is installed on the right side of the fuselage. The external supply is connected to the XPI AC busbar by a ground power contactor, which is energized by the ground power control unit (GPCU) which first establish that neither generator is online and that the incoming supply is correct in voltage, frequency and phase sequence before completing the circuit. The ground power supply is connected through the busbar tic contactor to all AC busbars, which in turn power the TRU's to provide DC power.
A 28V DC electrical supply can be connected to a DC ground supply point on the left side of the fuselage. The supply point is connected directly to I the APU starting circuit.

ELECTRICAL SYSTEM CONTROL AND INDICATORS.

Rapid Take-Off Panel

The RAPID TAKE-OFF panel is located in the lower main forward instrument panel and comprises nine two position toggle switches and a ganging lever.
Moving the ganging lever upwards sets all the switches to the FLIGHT position. However the switches can only be set to the OFF individually. The switches in the MIGHT position have the following functions:

BATTERY MASTER	Connects the battery busbar to the essential busbar (PP3).
FUEL BOOST PUMP	
Initiates operation of the:	
FRONT	Front fuselage tank group fuel pump.
REAR	Rear fuselage tank group fuel pump.
PITOT HEATERS	Connects power to incidence, pitot and total temperature probe heaters.
W/SCREEN HEATERS	Connects power to the electrical wind screen heater.
APU BLEED CLOSED	Closes APU bleed air valve.
IGNITION	Connects power to the engine igniter.
T1 PROBES	Connects power to the T1 probe heater.
FLT INST	Connects power to the pilot altimeter and attitude director and its turn rate gyro-unit.

With switches in the OFF position the relevant systems are de-energized and the APU BLEED switch opens the bleed air valve.

Engine Control Panel

The engine control panel includes the following electrical system control and indicators:
Two GENERATORS — ON/OFF toggle switches to select the generators on or offline, providing that the crash switches are in the normal flight position and the control and protection circuits permit.
Two amber GENERATORS LEFT/FAIL and RIGHT/FAIL lights illuminate when the associated generator contactor is open and the generator is off line.

Crash Panel

The crash panel (B, Figure 1-7) is marked CRASH and carries four switches which are guarded by a yellow ganging bar. It is marked with black stripes and labelled LIFT PULL. When the bar is operated, the switches marked GEN L/GEN R and the BATT switch move to the OFF position thus opening the generator contactors and disconnecting the maintenance busbar from the battery busbar. Consequently, all electrical system busbars, except the battery busbar, (PP4) will be deenergized. The FIRE EXT switch moves to the ON position and the engine fire extinguisher will discharge into both engine compartments simultaneously.

WARNING

THE ENGINES SHALL BE SHUT DOWN VIA HP COCKS PRIOR TO CRASH BAR OPERATION. IF THIS SEQUENCE IS NOT FOLLOWED THE ENGINES WILL ACCELERATE UNCONTROLLED TO SELF DESTRUCTION BECAUSE ENGINE CONTROL IS LOST AND THE OVERSPEED GOVERNORS ARE NO LONGER OPERATIVE.

Central Warning Panel

The following electrical system captions are displayed on the CWP:

Red warnings (both cockpits):

AC	Both generators offline
DC	Both TRU's have failed.

Amber warnings (front cockpit only):

GEN	Either or both generators offline In case of a high difference current of > 50 amps between the generators
TRU	Either or both TRU's have failed

ELECTRICAL POWER SUPPLY SYSTEM (CONTROLS AND INDICATORS)

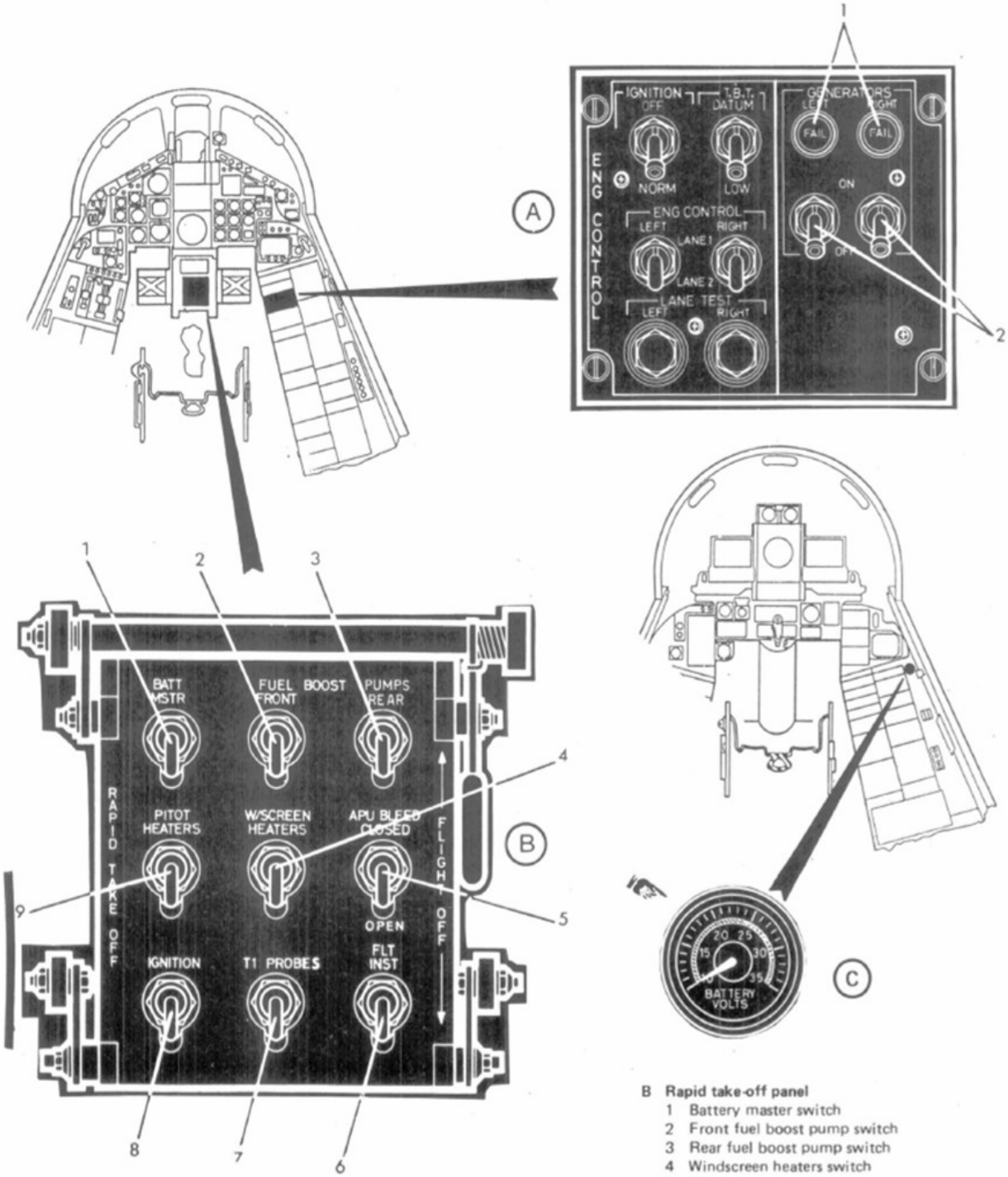

A Engine control panel

1 Generator failure lights
2 Generator control switches

B Rapid take-off panel

1 Battery master switch
2 Front fuel boost pump switch
3 Rear fuel boost pump switch
4 Windscreen heaters switch
5 APU bleed control switch
6 Flight instruments power switch
7 T1 probes heater switch
8 Engine igniters control switch
9 Pitot probe heater switch

C Voltmeter (Post Mod 01662)

HYDRAULIC POWER SUPPLY SYSTEM

Two separate hydraulic system independently supply pressure from hydraulic pumps mounted one each on the engine driven accessory gearbox. Each system draws fluid from its own hydraulic reservoir. A cross-drive mechanism between the gearboxes can be selected so that the APU or either engine can supply hydraulic power for both systems. Each engine normally drives its own accessory gearbox and hydraulic pump.
Each system is divided into a control and utility system, the control system being protected by an isolating valve which operates in the event of a leak to isolate the utility. If the leak lies in the utility system the remaining fluid is retained for the primary flight controls.

HYDRAULIC SYSTEM OPERATIONS

In normal operation, with the cross-drive clutch selected to AUTO, the cross-drive clutch closes when a 15% NH differential is sensed as an engine runs down, and both gearboxes are driven by the remaining engine: there is no change in the status of the hydraulic systems. In this situation, however, it is prudent to ensure that the HYDRAULICS switch of the shut-down engine is set to AUTO to guard against a subsequent gearbox failure, since in that event the hydraulic system does not depressurize with ON selected at the corresponding HYDRAULICS switch.
The hydraulic system was designed to operate with the HYDRAULICS switches both selected to AUTO in flight to allow the automatic depressurization of either system after a gearbox run-down (e.g., after an engine flames out with the cross-drive open). However, it was found that, with AUTO selected, a particular failure of the SPS control circuit could cause the depressurization of both hydraulic systems after a single gearbox run-down, and it was essential to have either of the HYDRAULICS switches set to ON to prevent this occurring.
Post Mod. 10977, which corrects the SPS control circuit logic, the aircraft can be safely flown with AUTO selected at both switches but, during the period where there are both Pre and Post Mod. 10977 aircraft in service, the best action is to fly with the HYDRAULICS switches set to LEFT — ON, RIGHT — AUTO. In the Pre Mod. 10977 aircraft with these selections, the possibility of a double depressurization is guarded against. In Pre and Post Mod. 10977 aircraft with these selections, the right hydraulic system depressurizes automatically after a right gearbox run-down but the left HYDRAULICS switch shall be set to AUTO to depressurize the left hydraulic system after a left gearbox rundown. Post Mod. 10977 after a double engine flameout (or when shutting down both engines on the ground), the left hydraulic does not depressurize unless the LEFT HYDRAULICS switch is set to OFF.

HYDRAULIC FLUID RESERVOIRS

Two reservoirs, one for each system, are located in the rear fuselage. Each reservoir has a hydraulic fluid capacity of 16.2 liters and is pressurized to approx. 8 bar. Each reservoir incorporates fluid level and temperature transmitters, a low-level switch and a pressure relief valve. Fluid level is indicated on aircraft skin gages. The low-level switch is in circuit with the system isolating valve.

HYDRAULIC PUMPS

Each constant pressure variable delivery pump incorporates a solenoid-operated depressurizing valve which is controlled by the appropriate HYDRAULICS — ON/AUTO/OFF switch and the relevant gearbox speed switch.
In the OFF position, the depressurizing valve is energized to limit system pressure to approximately 70:110 bar.
In the AUTO position, the depressurizing valve will be energized to reduce the accessory gearbox load while the APU is running and when the accessory gearbox speed is below 55% NH. While the engines are running down, the depressurizing valve will remain de-energized when the accessory gearbox speed in above 30% NH.
In the ON position, the depressurizing valve is de-energized to provide normal maximum discharge pressure of approximately 270 bar at zero flow and 260 bar at max. flow. In the event of a double engine flame-out, an EPS system provides hydraulic power for emergency operation of the taileron actuators. The hydraulic component of the EPS consists of a DC motor driving a variable delivery hydraulic pump (EHP), assembled as a package. The package is installed in the left secondary power bay in parallel with the engine driven hydraulic pump of the aircraft left hydraulic system (for further information refer to para EMERGENCY POWER SUPPLY SYSTEM).

HYDRAULIC ACCUMULATORS

A main accumulator in each system smooths out pressure surges from the pump and produces the flow response necessary for satisfactory operation of the flight controls. The accumulator is charged with nitrogen to 140 bar.

In addition to the main accumulator, each system has an accumulator which supplies the artificial pitch feel (charged with nitrogen to approximately 60 bar). This absorbs transient supply pressure variations to the feel system during normal operation and also ensures a slow reduction in feel jack stiffness should both utilities system fail. The left system has a canopy accumulator (charged with nitrogen to 105 bar) and a wheelbrake accumulator (charged with nitrogen to 140 bar). A fully charged wheel brake accumulator can provide a minimum of ten brake applications.
When the canopy accumulator is fully charged it can provide a minimum of three canopy operating cycles or may be used to back, up the wheel brake accumulator to provide a minimum of fifteen wheel brake applications. The accumulators are charged with nitrogen and the pressures in each accumulator are indicated on skin gages.

ISOLATING VALVES

Electrically operated isolating valves, controlled either automatically by the reservoir low-level switches or manually by the UTILITIES TEST switch, divide each system into two parts. If, due to a leak in the system the fluid content of a reservoir reduces to 3.2 liters the low-level switch operates to close the isolating valve. A pressure switch, downstream of the isolating valve closes when utility pressure falls below 130 ± 10 bar and illuminates the relevant amber UTIL indication on the CWP in the front cockpit (in addition the CSAS, PFCS and RAMP fail warnings will illuminate). All utilities in the affected system are isolated from the hydraulic pressure supply, except the taileron actuator in the left system, and the taileron and rudder actuators in the right system. This condition continue throughout the remainder of the flight as the reservoir low-level switch can be reset only on the ground.
The UTILITIES TEST switch is operated by the pilot to test the operation of the isolating valves and the failure indications before flight.

NOTE

In the event of a double engine flameout, the left hand isolating valve will be closed by an EPS signal, to conserve EHP pressure for operation of the tailerons.

HYDRAULIC COOLING

Each system is provided with a fuel-cooled hydraulic oil cooler installed in the low pressure return line to the reservoir.

HAND PUMP

The left system has a hand pump for pressurizing the wheelbrake and canopy accumulators. The pump is located in the left accessory gearbox compartment and is operated by a detachable handle stowed on the compartment door.

PRIORITY VALVES

Two pressure-operated priority valves, one for each system, ensure that large demands made by the secondary flight control system (principally wing sweep) do not affect the hydraulic supplies to the primary flight controls. Each valve starts to close when its upstream pressure reduces to 230 bar and is fully closed at 200 bar to temporarily isolate the secondary flight control system from the hydraulic supply.

HYDRAULIC SUPPLY

The hydraulic system provides power to operate the flying controls and utilities.

HYDRAULIC SYSTEM FAILURE AND WARNINGS

Each system contains a fluid temperature sensor upstream of the hydraulic oil cooler and is in circuit with the amber HYD T indication on the CWP in the front cockpit.
The caption illuminates if fluid temperature exceeds approx. 145 degrees C. The warning remains activated until temperature reduces to approx. 110 degrees C.
A pressure switch in each controls section is in circuit with its associated red CONTR indication on the CWP in both cockpits. The switch operates to activate the warning if the pressure falls below 130 ± 10 bar.
As described under "Isolating Valves", loss of fluid from either system will operate the low-level switch and close the respective isolating valve when the reservoir contents are reduced to 3.2 liters. With the isolating valve closed, a pressure switch downstream of the valve operates to illuminate the respective amber UTIL indication on the CWP. After activating the EPS system, the left utility system isolating valve closes and the amber L UTIL indication on the CWP illuminates.

HYDRAULIC SYSTEM CONTROLS AND INDICATORS

Hydraulic Pressure Indicators

Two gages marked L HYD and R HYD having rotating indicators displaying hydraulic pressure in each system, from 0 to 350 bar. A white sector on the scale indicates normal hydraulic pressure operating range.

Reservoir Fluid Level Indicators

Two gages, skin-mounted one on either side of the rear fuselage, having system reservoir fluid level in liters from 3.2 to 16.2. The left gage indicates the fluid level of the left hydraulic system and the right gage that of the right system.

HYDRAULIC SUPPLY

Left System	Right System
Flight Control System	Flight Control System
Tailerons	Tailerons
	Rudder
Utility System	Utility System
Rudder	
Flaps and slats	Flaps and slats
Krueger flaps	
	Airbrakes
Inboard spoilers	Outboard spoilers
Wing sweep	Wing sweep
Left air intake ramps	Right air intake ramps
Pitch "q-feel" system	Pitch "q-feel" system
Canopy	
Wheelbrakes	
Air-to-air refuelling	Air-to-air refuelling
probe emergency	probe normal
extension	
	Landing gear
	Nosewheel steering
	Radar stabilization
	and scanning

Main Accumulator Pressure Indicators

Two gages, skin-mounted one on either side of the rear fuselage, having moving indicators displaying the respective system main accumulator pressure in bar from 0 to 350 bar. The accumulators are pressurized by the relevant left and right hydraulic systems. If hydraulic pumps are depressurized, the indicator will show approx. 140 bar.

Canopy Accumulator Pressure Indicator

A skin-mounted gage, on the left side of the front fuselage, having a moving indicator displaying the pressure in the canopy accumulator from 0 to 350 bar. The accumulator is pressurized by the left hydraulic system, or by use of a handpump.

Brake Pressure Indicator

A pressure indicator, marked BRAKES, having three indicator needles showing against the upper scales the pressure at each wheel brake on the normal system only, and against the lower scale the accumulator pressure available. With the electrical power off the pointers indicate OFF.

Hydraulic Pressurization Switches

Two three-position latch-toggle switches (2, Figure 1-16), marked HYDRAULICS — LEFT/RIGHT — ON/AUTO/OFF, each controls the depressurizing valve on one hydraulic pump. The switches may be locked in each of the three positions:

ON The depressurizing valve is closed independent of gearbox speed to provide maximum discharge pressure.

AUTO During gearbox runup up to 55% the depressurizing valve is open to reduce gearbox load. Beyond 55% the valve closes and the hydraulic system will provide max discharge pressure. Dur-ng gearbox rundown, the depressurizing valve will not open before 30% (Post mod. 10977: in the case of a double engine flameout (both gearboxes run down) the left depressurizing valve stays closed. Only the right hand hydraulic system will depressurize to reduce gearbox load).

OFF The depressurizing valve is opened independent of gearbox speed, to limit system pressure to 70 110 bar.

Utilities Test Switch

A three-position switch, spring-loaded to the center position, marked TEST UTILITIES — LEFT/RIGHT, closes the respective isolating valve when set to LEFT or RIGHT, to simulate failure of the appropriate utilities system.

HYDRAULIC SYSTEM (CONTROLS AND INDICATORS)

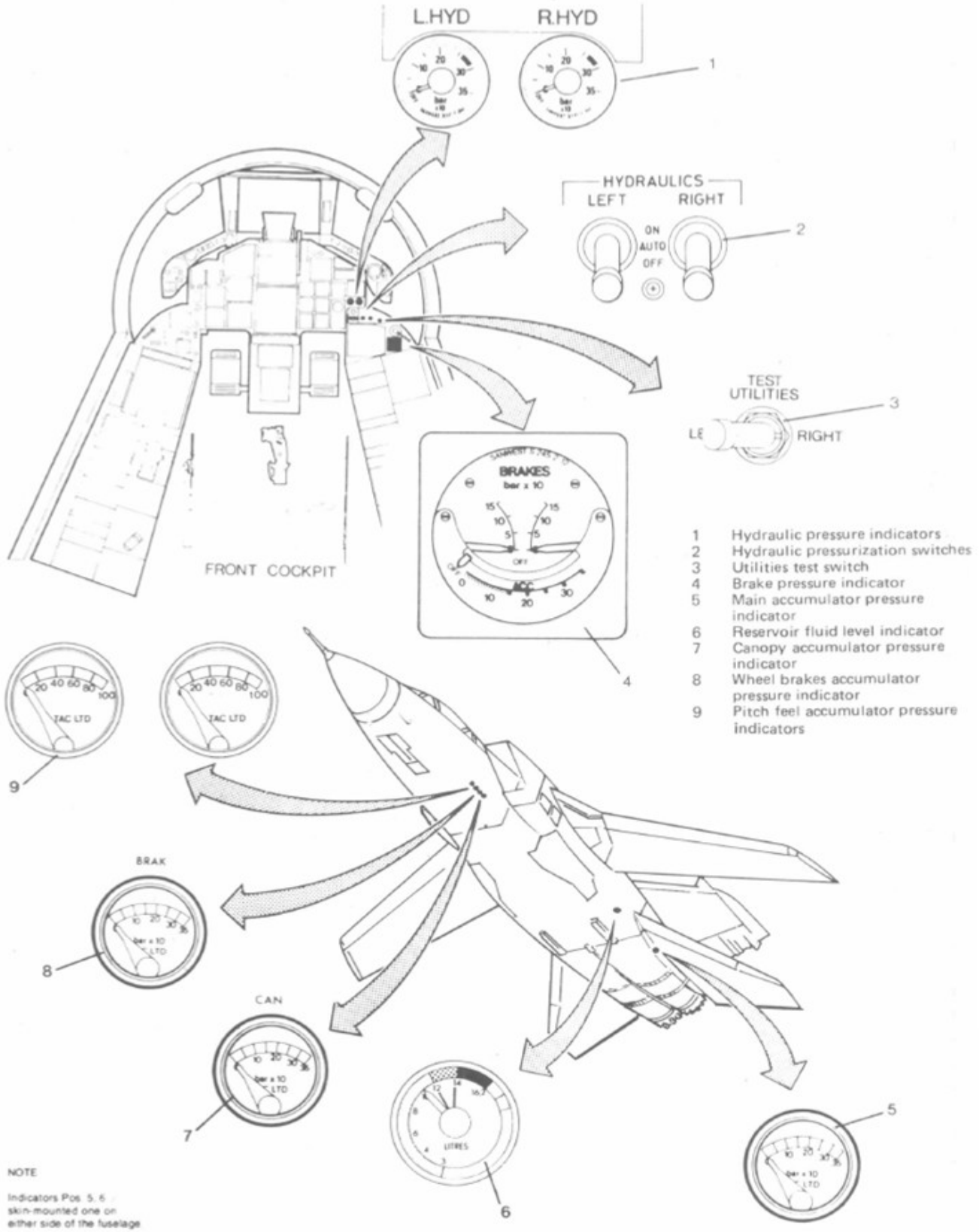

1 Hydraulic pressure indicators
2 Hydraulic pressurization switches
3 Utilities test switch
4 Brake pressure indicator
5 Main accumulator pressure indicator
6 Reservoir fluid level indicator
7 Canopy accumulator pressure indicator
8 Wheel brakes accumulator pressure indicator
9 Pitch feel accumulator pressure indicators

NOTE

Indicators Pos. 5, 6 skin-mounted one on either side of the fuselage

Central Warning Panel

Indications on the CWP for hydraulic system failures are as follows:

Red warnings (both cockpits):

L CONTR, R CONTR: Illuminates if hydraulic pressure falls below 135 bar ± 10 in the respective system.

Amber warnings (front cockpit only):

L UTIL, R UTIL: Illuminates if utility pressure falls below 130 bar ± 10 in the respective system.

L HYD T, R HYD T: Illuminates if the fluid temperature in the respective system exceeds approx. 145 degrees C. It remains activated until temperature reduces to approx. 110 degrees C.

LANDING GEAR SYSTEM

The landing gear (LG) is a tricycle-type, forward retracting and hydraulically operated. The main landing gear (MEG) consists of two oleo-pneumatic legs each having a single wheel. The arrangement of the MEG provides symmetrical gear operation. The nose landing gear (NLG) has twin wheel. Normal extension and retraction of the landing gear is electrically controlled and hydraulically operated. A nose wheel steering system forms part of the nose gear leg. An emergency lowering system is included, which is mechanically controlled and operated by nitrogen gas pressure.

MAIN LANDING GEAR

The main landing gear is retracted forward into the sides of the fuselage. Retraction is effected by hydraulic actuators powered by the right utilities system. The MLG is locked in the UP position by hydraulics latches and by self-locking drag braces actuated by a lock jack in the down position. The MLG doors are operated by hydraulic actuators. The landing gear selector lever is locked in the DOWN position by a solenoid which is activated by the WOG switch when the aircraft is on the ground. The LG can be retracted on the ground by pressing the red emergency override button, which releases the solenoid lock. The lever may then be raised.

CAUTION

DO NOT USE THE EMERGENCY OVERRIDE BUTTON IN THE AIR WHEN THE LANDING GEAR SELECTOR LEVER CANNOT BE RAISED.

To prevent inadvertent DOWN selection of the landing gear, the selector lever is mechanically locked in the UP position. It can only be released by pushing forward the uplock lever on top of the landing gear handle. Retraction and extension of the landing gear takes 5 ± 1 seconds.

NOSE LANDING GEAR

The nose landing gear (NLG) is retracted forward into a well. Retraction and extension are achieved by a hydraulic actuator, powered by the right hydraulic system. The oleo-pneumatic strut is held in the up position by means of a self-locking system as part of the drag brace. The lowered position is fixed by the same drag brake lock link, held down by springs and the pressure of the actuator. The two front doors of the landing gear well are controlled by the landing gear through a mechanical linkage. The rear gear door is fixed to the strut. The up and down locked positions of the doors are fixed by overcentering. In case of emergency, an additional nudger jack assist in overcoming the overcentering position of the door drive shaft.

LANDING GEAR EMERGENCY LOWERING SYSTEM

The emergency lowering system is supplied from a pressurized nitrogen storage bottle. The bottle is fitted with an emergency selector valve which is operated via a cable, by pulling the LG emergency lowering handle. When the handle is pulled out, irrespective of the position of the LG selector lever, pressurized nitrogen is routed to the actuators of the NG door emergency release mechanism and leg, the MLG door locks, doors and legs. At the same time the MLG and NG dump valves will open. The LG will extend and lock down in the normal manner. While the landing gear is in transit, the red U/C caption on the CWP illuminates and the lyre bird tone sounds. When the gear is locked down, the landing gear position indicator will show three green lights, the U/C caption extinguishes and the lyre bird tone ceases. If the LG selector lever is in UP, the lever warning will continue to flash.
Subsequent to the emergency LG lowering the LG lever should be selected DOWN. This will cancel the gear-up signal which otherwise could be felt by the aircrew as an irritating "bang" during taxing each time the nosewheel passes the centered position.

NOSEWHEEL STEERING SYSTEM

The nose wheel steering system (NWS) provides two steering modes. In the LOW mode (green LOW indication of the split legend NWS selector/indicator), used for landing and take-off, nosewheel deflection is ± 30 degrees. In the HIGH mode (green LOW and amber HIGH indication), used for taxi manoeuvres, deflection is ± 60 degrees. The NWS system will deflect the nosewheels at an approx. rate of 20 degrees/second in both steering modes.
The system is energized manually by pressing the nosewheel steering mode selector/indicator or automatically after gear lowering and successful NWS BITE.
Initial engagement of the nose wheel steering system is always into the LOW mode. In the LOW mode only, automatic yaw compensation augments normal steering demand. Directional control is obtained by either operating the rudder pedals or automatically, with max ± 6° authority, in the case of rapid directional changes. The automatic control is obtained by feeding yawing speed signals from the lateral computer into the steering control box, which computes a corrective steering signal, resulting in automatic lateral stabilization of the aircraft. When the nosewheels and either main wheels are off the ground, a "steer to center" signal is applied to the steering system and the NLG can only be retracted if the nosewheels are centered. The NWS is automatically tested within 12 seconds after the
nose gear is down. Successful testing is indicated by illumination of the LOW (green) caption of the split legend nose wheel steering mode selector/indicator. In case of steering and yaw control failure, audio warning and LOW caption out occurs, in case of yaw control failure only, audio warning and LOW indication appears.
After touchdown of the main wheels, the LOW caption extinguished, steering is disengaged and the nose wheel is in free castor. After nose gear touchdown, the LOW caption again illuminates, an automatic engagement of the system occurs with a 1,5 sec "fade in" time. The system can be disengaged manually by pressing the ICO on the control stick. For detailed information of NWS failure refer to Section III.
The nose wheel steering mode selector/indicator can be pressed again to engage the HIGH mode, indicated by illumination of the HIGH (amber) caption of the selector/indicator.
Subsequent mode changes are effected as required by pressing the selector/indicator.
With NWS not selected the wheels are in free castor with a deflection up to 360 degrees. Shimmy damping is provided in the free castor mode.
Low and high indicators are extinguished.

NOTE

The nose wheel steering system will deflect the nose wheels at an approx. rate of 20 degrees/second in both steering modes.
Immediately the nose wheels and either main wheel are off the ground, a "steer to center" signal is applied to the steering system.
A sequence switch system ensures that the nose landing gear cannot be retracted unless the nose wheels are centered.

NOTE for Microsoft Flight Simulator:

Nosewheel steering system can be toggled via the SET NOSE STEERING TO LIMIT control.

WHEEL BRAKE SYSTEM

Each main landing gear wheel is equipped with a hydraulically operated multiple disc brake. Pressure for operation of the brakes is supplied by the left utility hydraulic system for normal operation.
Normal braking is protected by an antiskid control system. Emergency and parking brake facilities are provided.
Normal braking operations are controlled by conventional brake pedals, connected to hydraulic foot motors with the braking module.
Emergency braking is available if the left hydraulic system fails and an initial brake pressure of 150 bar is available as for normal braking. A changeover valve supplies system pressure from the wheel brake accumulator thus providing approximately 15 brake applications, but no anti-skid facility.
Additional provisions are made for selection of the brake handle to the emergency position. The brakes are operated in the normal manner by the rudder pedals but will be supplied from the emergency brake circuit.
Full parking brake pressure of the accumulator acts on the brakes, via the emergency brake circuit, on selection of the brake handle to the parking position.
In the event of a pressure drop in the wheel brake accumulator, further brake pressure is automatically provided from the canopy accumulator.

CAUTION

DO NOT SELECT THE PARKING BRAKE WHILE THE AIRCRAFT IS IN MOTION AS THIS WILL ABRUPTLY LOCK THE WHEELS AND CAUSE TIRE DAMAGE.

NOTE

If the left hydraulic utilities system is still functioning normally, the wheel brake accumulator will be kept full. In this case the number of brake applications is not limited.

The brake selector handle is repositioned to emergency or normal from the parking position, by reversing the actions required to select those positions.

ANTI-SKID SYSTEM

The aircraft wheel brake system is equipped with an electrically controlled anti-skid system, consisting of three basic units: a control box, servo valves, and wheel driven generator sensing unit. The units are designed to give individual wheel skid control operation.
The anti-skid control system provides the following functions:

- Anti-skid touch-down protection
- Proportional skid control
- Locked wheel protection circuit
- Anti-skid failure detection

The system is energized by the main landing gear up-lock switch, whenever the LG is extended. Whenever either wheel begins to enter a skid, as evidenced by a rapid wheel deceleration sensed by the wheel driven generator unit and relayed to the control box, the skid control system causes the corresponding metered pressure to that brake to be reduced in proportion to the intensity of the skid by the skid control valve. As a result, the wheels return to the efficient braking/rolling speed just below the skid threshold. The system also compensates automatically for changes such as runway conditions, load and pedal pressure by the pilot. Below 10 knots speed, the system is inoperative, because the wheel excursions will be too small to operate the skid detector circuits.
The wheel speed sensors are wheel driven generators, which provide an output voltage proportional to wheel speed.
The output sensor of each wheel speed sensor is applied to the appropriate three stage skid control unit.

- The first stage is a deceleration detector, which differentiates the wheel speed voltages and produces an output signal, which is therefore a measure of wheel deceleration, whether it is the slow deceleration of the braking stop or the high deceleration of an incipient skid.
- The wheel deceleration signal is routed to a skid detector circuit, which represents the second stage. This circuit is set to provide an output signal only if the wheel deceleration is 8.5 m/sec^2 or more.
- The skid detector output signals are applied to the third stage, an amplifier, whose signal is used to power the associated brake pressure servo valve, which lowers the brake pressure while simultaneously depressurizing the brake cylinders. This allows the wheel to speed up again, which causes the brake to be reapplied. Should one wheel be locked completely, the brake pressure will be held off for a period of time that depends upon the speed of the wheel just before it become locked.

Touchdown protection is provided by the touchdown protection circuit in the control box. This receives wheel speed signals from both wheels and a landing gear signal from the shock strut relay. The circuit prevents brake application unless the aircraft is on the ground and the wheels have spun up. In the event of aircraft bounce at touchdown, the brakes will be automatically held off until the aircraft touches down again. The touchdown protection is inoperative whenever the BRAKES TEST button is pressed.

Built-In Test Equipment

When the pilot momentarily presses the BRAKES TEST button on the ground to initiate a systems test, a signal representing 20 knots wheel speed is applied through the wheel drive unit to the control box. On releasing the test button, a skid is simulated and the built-in test equipment (BITE) checks the system components. In flight, pressing and holding the button, the test signal overrides the touch down protection system enabling the pilot to depress the brake pedals and observe the hydraulic pressure on the brake pressure triple indicator; if a fault exists or a circuit does not respond within prescribed limits, then control circuits de-energize the system and an amber A-SKID warning light on the CWP in the front cockpit illuminates.

Normal Brake Indicating System

The normal braking pressure lines are equipped with pressure sensors, which control the left and right indicator on the triple brake pressure gage. The triple brake pressure gage is powered by the essential DC busbar (PP3) and indicates normal brake pressure applied by the pilot when:

- The LG is UP and locked, or
- The LG is DOWN and locked and either the aircraft weight is on the wheels or the BRAKES TEST button is pressed

Normal indication is approximately 140 bar with maximum pressure exerted on the brake pedals. The ACC (accumulator) pointer on the brake pressure indicator is controlled by a pressure sensor on the brake accumulator. This indication is available as long as the essential DC busbar (PP3) is energized. Whenever pressure indication is 140 bar or less, the brake accumulator is below min. charge pressure and emergency and parking brakes will not be available.

LANDING GEAR SYSTEM CONTROLS AND INDICATORS

Landing Gear Selector Lever

The landing gear selector lever, located on the left hand quarter panel, marked U/CARRIAGE — UP/DOWN comprises:

- A two position wheel-shaped lever to select the Ldg— Gear UP or DOWN. The red warning light in the LG selector lever will always flash whenever the landing gear position does not agree with that of the lever, e.g., if selected to UP until all gear legs and doors are locked up, if selected to DOWN until the LG is locked down.
- Landing gear selector lever down-lock override red push button, which overrides an oleo switch, permitting the landing gear to be selected UP.
- Landing gear selector lever up-lock. Protrudes from the top of the lever handle and mechanically prevents the lever from being inadvertently selected DOWN. To release the up-lock push the landing gear lever up-lock forward.

Landing Gear Position Indicator

The landing gear position indicator is located on the left side of the main instrument panel in the front cockpit, and in the left hand quarter panel in the rear cockpit.
It has the following functions:

- Three red UNLOCKED warning lights, one for each landing gear illuminate when a landing gear leg or a main LG door is not locked (i.e., not locked up)
- DAY/NIGHT brightness control knob with arrows pointing to the desired selection.
- Three green LOCKED DOWN indicator lights, one for each landing gear leg, illuminate when the landing gear is in the LOCKED DOWN position.

All lights are extinguished when the landing gear is locked UP and the doors are locked closed.

NOTE

The LG position indicator functions independently of the LG selector lever position.

Emergency Landing Gear Lowering Handle

A yellow and black striped handle, located on the left hand quarter panel and marked EMERG U/C, permits emergency lowering of the landing gear by pulling the handle. The handle shall be reset on the ground.

NOTE

There is a tendency to apply either a sideways force or rotation when pulling the handle and, in extreme cases, this can cause jamming. Always apply a straight pull force and avoid any rotation of the handle. The collar behind the landing gear emergency handle is for resetting purposes: crews should not attempt to move it except as a last resort if the handle fails to operate.

Nose Wheel Steering Mode Selector/Indicator

A combined selector/indicator push button, located on the left hand side of the main instrument panel, marked HIGH (amber) and LOW (green). The button permits initial selection of the nose wheel steering system in LOW mode and alternate selection of the HIGH wheel steering mode.

LANDING GEAR SYSTEM

1 Emergency landing gear lowering handle
2 Landing gear position indicator
3 Nosewheel steering selector indicator
4 Brake selector handle
5 Brake pressure triple indicator
6 Brake test button
7 Landing gear selector lever
8 Landing gear selector lever up lock
9 Landing gear selector lever down lock override

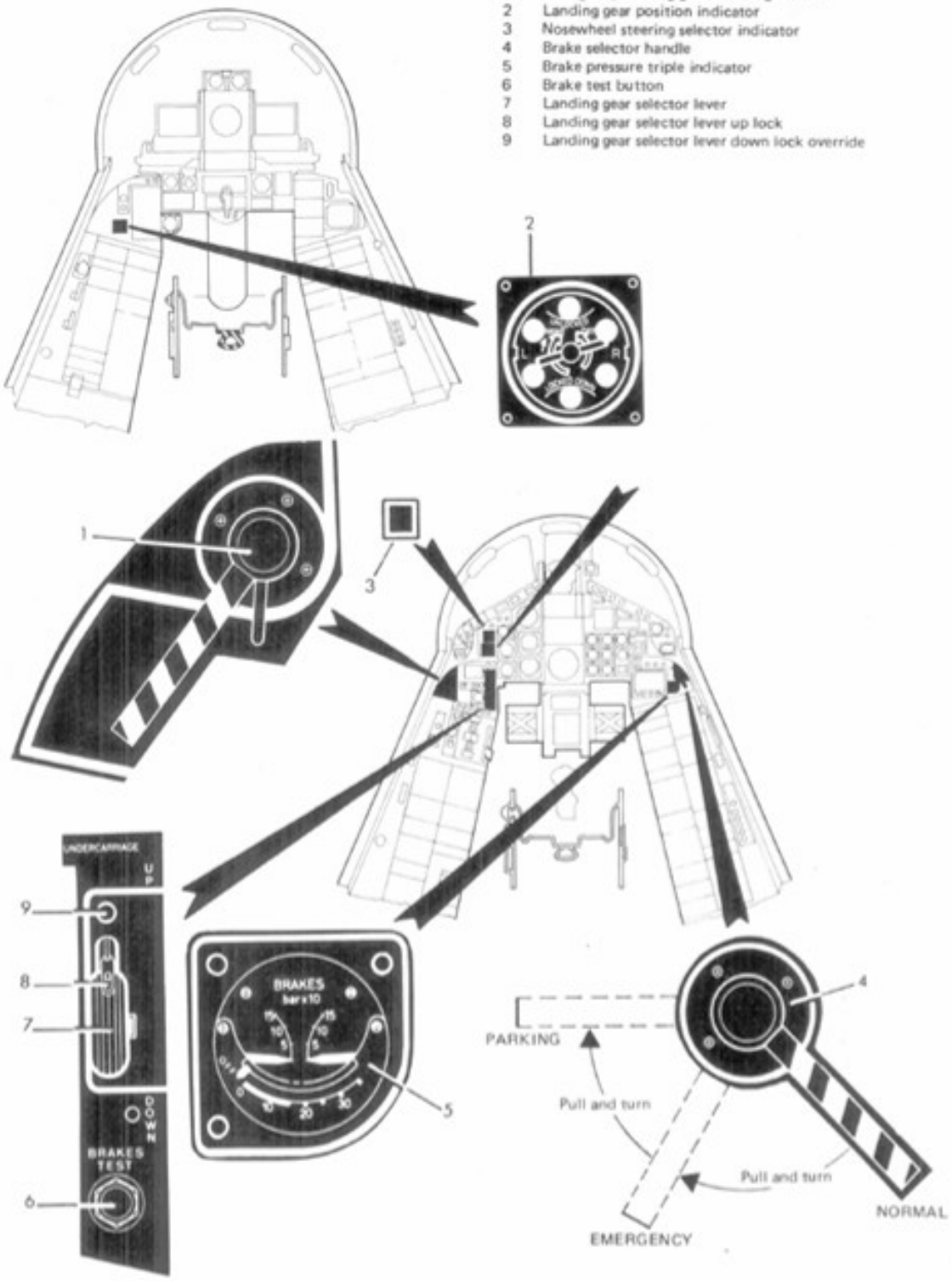

Figure 1-17

Instinctive Cut Out Switch (ICO)

A push button, located on the control stick grip under the ICO bar, when pressed disengages the nose wheel steering.

Brake Selector Handle

A black and yellow striped three-position handle, located on the right hand quarter panel, operated with a pull-out and turn action. In the fully in position, the handle selects normal braking facilities. When the handle is pulled out to
the first stage and turned clockwise through approximately 80 degrees, the emergency braking facilities are selected. Pulling the handle further out to the second stage and turning it through a further 50 degrees selects parking brakes.
The brake selector handle is reselected to the emergency or normal positions by turning the handle counterclockwise to the required position and pushing it into the panel to the required stage.

Brakes Test Button

The brakes test button, marked BRAKES TEST, is located on the left hand quarter panel. This button is used to test the integrity of the brake system.
For details of the button functions refer to Built-In Test Equipment in this chapter.

Brake Pressure Triple Indicator

A three pointer brake hydraulic pressure gage, located on the right hand quarter panel, marked BRAKES/barX10, include the following indications:
The twin pointers indicate, against the upper scales, the pressure at each wheel brake on the normal system only.
The lower pointer shows accumulator pressure available for the brakes. A red zone on the lower scale indicates that the accumulator is exhausted, and there is no sufficient pressure available for either normal, emergency or parking brake purposes.

Central Warning Panel

Indication on the CWP for landing gear system failure is provided through a red caption marked U/C.
The U/C caption will illuminate and the lyre bird tone sound when the following conditions occur simultaneously:

- Any LG leg or door are not locked in the landing configuration.
- Altitude at or below 10,000 ± 1,000 feet
- Airspeed at or below 180 ± 12 knots
- Either throttle retarded to 92 ± 2% NH or below

The lyre bird tone will stop and the U/C caption extinguish whenever one of the above conditions cease to exist. The lyre bird tone may be silenced by pressing any one of the attention getters.

LANDING GEAR OPERATION

When the LG is selected to UP, the warning light in the LG selector handle flashes: After the nosewheels have centered, the NLG downlock is released, the green NLG position light will extinguish, and the red light illuminates as the NLG retracts. Simultaneously the MLG downlocks are released, the corresponding green LG position lights extinguish and the red lights illuminate as the MLG retracts. After the MLG legs are up and locked the MLG doors close and lock, the red lights extinguish, and the LG selector lever stops flashing.
When the LG is selected to DOWN, the warning light in the LG selector handle flashes. The NLG, the MLG door locks and leg uplocks are released, the red LG position indicator lights illuminate, and the LG is lowered. Leg down locking is indicated by the corresponding green lights on the position indicator, and the LG selector lever stops flashing. To avoid the risk of an inadvertent gear up landing, the warning light in the LG selector flashes, the red U/C caption on the CWP illuminates and the lyre bird warning tone sounds, if the following conditions are met simultaneously:

- Any LG leg not locked down or any MLG door.
- not in the commanded position
- Altitude at or below 10,000 ± 1,000 feet
- Airspeed at or below 180 ± 12 knots
- Either throttle retarded to 92% NH (± 2) or below

Whenever one of the above conditions ceases to exist, the lyre bird tone will stop sounding, the warning light in the LG selector lever and the U/C caption will extinguish.
The lyre bird tone may be silenced by pressing any one of the attention getters.
Emergency landing gear lowering is mechanically controlled through a yellow and black striped handle located on the front cockpit left hand quarter panel, and pneumatically operated by a nitrogen gas pressure. Correct operation of the emergency system and indication that the landing gear is down and locked is

displayed as follows:

- Three green lights illuminated on the landing gear indicator (to confirm that the three landing gear legs are down and locked)
- Selector lever warning light flashing
- U/C caption & lyre bird tone on

ARRESTING HOOK SYSTEM

The system consists of the arrester hook, a hook release combined push button and indicator marked HOOK, a torque tube and cam assembly and an electrically operated solenoid up-lock and release unit. The green arrester hook indicator light illuminates when the solenoid up-lock and release mechanism has opened.
The arrester hook is stowed manually and retained in the retracted position by the up-lock and release unit. The hook is forced down by the combined action of the torque tube and cam assembly and its own weight.

CAUTION

- DO NOT LOWER THE ARRESTER HOOK UNTIL APPROXIMATELY 500 FEET IN FRONT OF THE ARRESTER CABLE. DAMAGE TO THE HOOK WILL BE CAUSED BY CONTACT OF THE RUNWAY.
- THE ARRESTER HOOK IS DESIGNED TO BE LOWERED ONLY WHEN THE AIRCRAFT IS ON THE RUNWAY. LOWERING THE ARRESTER HOOK WHILE AIRBORNE MAY RESULT IN SWINGING ACTION CAUSING STRUCTURAL DAMAGE.

ARRESTING HOOK SYSTEM CONTROLS AND INDICATORS

The hook release combined push button and indicator is housed in a blank and yellow striped sleeve. Pressing the button releases the arrester hook and illumination of the green light indicates that the hook is released.

CAUTION

DO NOT DEPRESS THE BUTTON FOR LONGER THAN 5 SECS, OTHERWISE DAMAGE MAY OCCUR TO THE RELEASE SOLENOID.

HIGH LIFT DEVICES

SLAT & FLAP SYSTEM

A three sections slat is installed in the wing leading edge. Each slat section is equipped with two tracks which slide over rollers fitted to the wing leading edge. The three sections are mechanically linked to each other and moved by four screw jacks. A rubber seal if fitted to the slat lower surface to ensure slat to wing leading edge sealing when slats are retracted. four sections, double slotted flap is fitted spanwise along the full trailing edge of each wing. Each section consists of a main vane and a leading-edge vane fixed to the main vane. The actuation system comprises eight screw jacks, two for each vane.
A roller and track system gives a downward and a rearward movement when the flaps are extended. Two independent sets of torque shafts driven by a single drive unit operate slat and flap screw jacks respectively. A telescopic shaft is provided to allow wing sweeping. The drive unit, located in the center fuselage, is powered by four hydraulic motors, two motors driving the flap system and two motors driving the slat system. Hydraulic power is supplied by both hydraulic systems, each powering one slat and one flap motor. When a hydraulic failure occurs, the motors powered by the functioning system are able to drive both flaps and slats to their full travel, but at reduced speed.
For detailed information on system operation, refer to "SECONDARY FLIGHT CONTROL SYSTEM".

NOTE for Microsoft Flight Simulator:

The in-game flap lever control is used to control also the wing sweep ane maneuver flap system – see "Secondary Flight Control System" for more details.

KRUEGER FLAP

The Krueger flap is a slotted aerofoil section which is hinged about three points on the nib leading edge. The flap is operated by a hydraulic jack which acts in conjunction with the slat and flap and is controlled by the high lift lever.

NOTE for Microsoft Flight Simulator:

On some Tornado variants, the Krueger flaps have been disabled or removed. In this MSFS rendition they are enabled only on the IDS variant.

PRIMARY FLIGHT CONTROL SYSTEM

The primary flight control system (PFCS) consists of the tailerons, the rudder and the spoilers, the command and stability augmentation system (CSAS), which functions as a signal computer, and the electrical, mechanical, hydraulic and pneumatic subsystems for control signaling and control power. The flight control system is interconnected with the pilots control stick and rudder. Tailerons symmetrical movement affects pitch control, taileron differential movement affects roll control. A conventional rudder is actuated via the control pedal. Spoiler operation at wing sweep less than 50 degrees supplements roll control manoeuvres.

CSAS

The CSAS is an integral part of the PFCS providing "fly-by-wire control" in two modes: full CSAS known as Manoeuvre Demand (MD) which is the normal mode of operation and Direct Link (DL) which is the electrical reversionary mode. A mechanical mode, which is normally disengaged, provides conventional hydraulic powered control via the tailerons in the event of certain multiple failures within the CSAS.
The CSAS incorporates a Mode and Failure Logic System (MFLS) which continuously monitors the triplex signal integrity and registers failures on the CSAS control panel and CWP.
Mode reversions are automatically initiated when multiple failures are detected. The pilot can also select and deselect reversionary modes for training purposes. Provision is made for a smooth changeover using faders.

NOTE for Microsoft Flight Simulator:

In this rendition the fligh control system is not flagged as a “fly-by-wire” and basically acts always as a hydraulically-actuated direct link. Procedures and indicators will work as in real-life, but the primary flight control will always work as long as hydraulic power is available.

FULL CSAS

The full CSAS mode is a triplex, electrically signaled control and stability system utilizing pitch and lateral computers, with the lateral computer also containing the electronic circuits for yaw control. Control demand signals to control surface hydraulic actuators are modified by air data inputs derived from the Triplex Transducer Unit (TTU), and wing sweep, flap and airbrake position signals and subsequent aircraft responses. The system produces PFCS response according to aircraft configuration and flight conditions. Rate gyros for each axis provide signals to improve short period and Dutch roll damping, thus improving overall general stability.
With the autopilot engaged, triplex control demand signals to the CSAS are generated by the autopilot and flight director system.
The pitch and roll output signals of the CSAS are routed to the taileron actuators. The electrical signal is converted into a mechanical movement, which operates the taileron power actuator servo valve. Roll output signals are also fed to the inboard and outboard spoilers provided that wing sweep is less than 50 degrees.
The yaw output signal of the CSAS is transmitted to the rudder actuator loop.
The following pitch and roll deflections can be achieved:

- Symmetric taileron deflection (pitch command) is limited to + 10 degrees (nose down) and —30 degrees (nose up).
- Differential taileron deflection (roll command) is limited to ± 10 degrees.

If full pitch command is generated, a roll command will be executed only on that side of the taileron, on which a reduction of the taileron deflection is commanded. The opposite side stays at its positive or negative maximum.
The roll/yaw crossfeed input improves rapid rolling characteristics together with turn entry and exit characteristics, especially under high load factors.
The maximum roll rate is approximately 150 degrees/sec. With mid and full flaps it is scheduled to a maximum of 40 degrees/sec.
Fin load protection is provided by the air data scheduled limiter which limits the rudder deflection to 30 degrees up to 244 kt, decreasing progressively to ± 10 degrees at 355 kt and above.

DIRECT LINK

If a second failure occurs, the CSAS switches to DL in the failed mode. Pilot's command signals from pitch and/or roll stick position sensors are directly feeding the taileron and spoilers actuators.
In pitch DL, taileron authority is reduced to + 5 degrees and — 25 degrees; flaps and/or airbrake inputs will result in a slight increase in negative taileron authority. With full roll stick applied and for flap settings above 15 degrees, ± 4 degrees of differential taileron and 39 degrees of spoiler are available. With flaps in up, the authority remains 2.1 degrees of differential taileron and 18.5 degrees of spoilers.

MECHANICAL MODE

Control reversion to mechanical mode is applicable only to the pitch and roll axes. Spoiler control may still be

operating, depending on failure location. All other features of CSAS or DL are lost. Reversion to mechanical mode is achieved via a mode selector valve in each taileron actuator. Any disparity between electrical and mechanical control demands will be automatically trimmed out via a trim actuator in approximately 10 sec. During this time the pilot retains full command authority although the neutral stick position may be temporarily displaced. Control stick pitch and roll demands are mechanically routed via the pitch/roll mixer to a servo valve, directly controlling taileron position with the control stick. Pitch authority is limited to + 5 degrees and — 25 degrees. Roll authority is ± 5 degrees taileron and if spoilers are available, spoiler deflection is limited to 18.5 degrees.
In the yaw axis no mechanical back-up mode is provided. In the event of the second failure condition, the rudder will be centered and locked and the roll channel reverts to DL if the flaps are up. With flaps extended beyond 15 degrees, the roll MD channel is automatically reengaged to restore roll control authority for approach and landing.

SPOILERS

Two pairs of spoilers, inboard and outboard, are fitted to the upper surface of the wings. The inboard spoilers are powered by the left, and the outboard spoilers by the right utility system. The spoilers operate in pairs to augment roll control at wing sweep angles of less than 50 degrees. At wing sweep above 50 degrees the spoilers are inhibited. Spoilers extension is directly proportional to differential taileron demand, with a maximum extension of 50 degrees. Spoilers are controlled via the CSAS roll channel.
All four spoilers deploy when lift dump is selected. However, the lift dump facility is not a function of the CSAS.
In the event of a hydraulic system failure the associated pair of spoilers retract under aerodynamic pressure.

TAILERONS

Each taileron is controlled through a power control unit (PCU) incorporating two hydraulic linear actuators arranged in tandem with a common output shaft, and a quadruplex actuator. The PCU is normally supplied from both hydraulic systems (protected circuits), with each circuit supplying one half of the main actuator, and two of the four quadruplex actuator lanes. If either hydraulic circuit fails, the PCU continues to function but taileron response rate is reduced and only two of the four quadruplex actuator lanes are operative.
In MD and DL quadruplex demands drive the quadruplex actuator to signal the main actuator, whereas in mechanical mode, demands are routed through mechanical links direct to the main actuator.

RUDDER

The rudder PCU operates similarly to the taileron PCU. However, upon reversion, the main actuator servo valves are isolated by the mode selector valve, and a secondary servo valve, operated by a mechanical feedback, takes over and returns the actuator to the centered position at a controlled rate. The rudder is powered by the right control and left utility systems.

TRIM SYSTEM

Roll and pitch are normally commanded by the control stick grip trim button. The button controls two separate trim control lanes. This is a provision to prevent runaway trim in case of a single failure.

WARNING

MANUAL TRIM SHALL NOT BE USED WITH THE AUTOPILOT ENGAGED.
THE USE OF MANUAL TRIM WITH THE AUTOPILOT ENGAGED, RESULTS IN DANGEROUS TRANSIENT WHEN THE AUTOPILOT IS DISENGAGED. SUBSEQUENT COUNTERACTIONS TAKEN BY THE PILOT WILL NOT STOP THESE MOTIONS BUT LEAD TO CONSIDERABLE PILOT INDUCED OSCILLATIONS (PIO'S). SHOULD THIS SITUATION ARISE, THE PILOT SHOULD DEPRESS THE ICO, AND MOVE THE CONTROL STICK IN THE DESIRED DIRECTION AND FREEZE IT.

NOTE

- When the guard on the emergency trim switches (CSAS control panel) is lifted, the control stick grip trim control is inhibited, and emergency trim is operative.

- In full CSAS no direct relationship exists between stick position and control surfaces, thus the TRIMS indicator only serves for trim positioning for take-off and to indicate the trim authority remaining in flight.

Trim positions are indicated for all three axes on the three axes trim indicator.

CONTROL DEFLECTIONS, TRIM AUTHORITY AND TRIM RATE

	Control Stick/ Pedal Deflections	Control Taileron/Spoiler Rudder		Trim Rate (Normal)	Emergency Trim Rate
		Control Deflection	Trim Authority		
PITCH Stick	± 13 degrees = 132 mm	+ 10 degrees to − 30 degrees mech. + 5 degrees to − 25 degrees	+ 5.2 degrees CSAS − 21.2 degrees max + 3.6 degrees DL/ − 14.6 degrees mech. mode	4.5 degrees/sec CSAS max 1.6 degrees/sec DL/ mech. mode	1/4 Trim Rate of normal operation
ROLL Stick	± 24 degrees = 91.4 mm	full CSAS ± 10 degrees diff. Tail ± 50 degrees Spoiler DL ± 2.1 degrees diff. Tail ± 18.5 degrees Spoiler mech. ± 5.0 degrees diff. Tail ± 18.5 degrees Spoiler	full CSAS ± 9.3 degrees diff. Tail ± 50 degrees Spoiler DL ± 0.81 degrees diff. Tail ± 4.1 degrees Spoiler mech. ± 1.06 degrees diff. Tail ± 4.1 degrees Spoiler	0.21 degrees Tail./sec full CSAS 0.24 degrees Tail/sec mech. mode 0.19 degrees Tail/sec DL mode	Trim Rate same as in normal mode
YAW Pedal	± 82mm	± 30 degrees max ± 5 degrees min.	± 4 degrees	via CSAS	

Pitch Trim

Pitch trim is effected by a trim actuator incorporating two electric motors. When actuated, the trim actuator moves the artificial feel actuator pivot point, which in turn provides a new stick center position in pitch. One of the trim actuator motors is controlled by the controls stick grip trim switch, the other by the emergency PITCH trim switch on the CSAS control panel. The emergency trim motor operates at approximately one quarter of the normal trim rate.

Roll Trim

Roll trim is similarly effected by two electric motors driving a trim actuator. One of the trim actuator electric motors is controlled by the control stick grip trim switch, the other by the emergency ROLL trim switch on the CSAS control. panel. The emergency trim rate is equal to the normal trim rate.

Yaw Trim

Yaw trim is effected by operating the YAW TRIM wheel on the CSAS control panel. A potentiometer on the trim wheel supplies a trim signal to the CSAS lateral computer, thus altering the rudder actuator control signals. Trim rate is a function of trim wheel movement. There is no provision for emergency trim in yaw.

NOTE

Do not operate the yaw trim wheel with rudder locked, as all trim commands are stored and will become active upon rudder reengagement.

PRIMARY FLIGHT CONTROL POWER SOURCES

The taileron actuators are powered by the two hydraulic systems. The inboard spoilers are powered by the left and the outboard spoilers from the right utility system. The rudder is powered by the right hydraulic system and left utility system.

ARTIFICIAL FEEL SYSTEM

Artificial feel is provided in all three axes. The artificial feel applies a centering force to stick (pitch and roll direction) and rudder pedals towards trim position. Variable pitch feel forces assist to comply with the control stick force/g requirements. The artificial pitch feel is powered by the left and right utility system.

PITCH

Pitch centering forces are generated by a pitch feel control. Normally the feel forces are generated within the pitch feel control by the hydraulic pressure from the left and right hydraulic utility systems and a mechanical spring unit. The computing elements of the feel control unit vary hydraulic pressure as a functions of dynamic pressure, wing sweep and Mach number. Duplicated pneumatic pressure signals provide the "O-feel" signal to the computing element of the control unit. A Mach number cut off device changes the force gradient once a predetermined Mach number (M = 0.9) has been attained. A mechanical input changes the force gradient as a function of wing sweep.

Stick forces will increase with:

- Increase in dynamic pressure!
- Increase in air density.
- As the wings are swept forward

Transient supply pressure variations are absorbed by a hydraulic accumulator which also provides a slow decay in feel control stiffness in the event of loss of both hydraulic systems. Loss of one hydraulic system will not cause any change in feel characteristics.
In the event that both hydraulic systems are lost, the mechanical spring unit only will provide unscheduled low pitch feel and stick centering forces.

ROLL

Roll feel forces are generated by a mechanical spring unit with double slope force gradient and additional breakout forces. It provides low sensitivity for large control inputs (i.e., high altitude/low speed).

YAW

Pedal forces are generated by a spring unit with linear force characteristics.

PRIMARY FLIGHT CONTROLS AND INDICATORS

CONTROL STICK GRIP

The pilot's control stick grip contains a trim button unit, a weapon release button (guarded), a press-to transmit (PTT) button, an autopilot engage/disengage button, an autopilot/nosewheel steering instinctive cut-out (ICO) switch, and a trigger for actuating the camera and the gun.
The trim button unit consists of a pyramid cap which houses two toggle switches.
Purpose of the trim button consists of pyramid cap which houses two toggle switches.
Purpose of the trim button is to provide trim control in the pitch and roll angles. The trim button is spring-loaded to the center and can be moved forward, backward, left and right.
Movement of the trim button causes roll position and pitch transducers to produce signals which are forwarded to the lateral and the pitch computers. The pyramid cap should be lifted for maintenance purposes only.

NOTE

The trim button unit in the control stick grip is inoperative when the guard on the emergency trim switches on the CSAS control panel is lifted up.

CSAS CONTROLS AND INDICATORS

The CSAS control panel includes the following controls and indicators:

PREFLIGHT/1ST LINE CHECK SWITCH

A two-position toggle switch labelled PREFLT/1ST LINE guarded to PREFLT selects the required level of BITE.

TEST PUSHBUTTON/INDICATOR

A guarded combined push button and indicator light, labelled TEST. The indicator light has three individually illuminated sections, designated as follows:

- TEST (white)
- GO (green)
- NO GO (red)

Pressing the button will initiate the BITE check. The TEST section illuminates to indicate the BITE check in progress. The test results are displayed by either the GO or NO GO lights.
BITE test procedures are detailed in Section 2 of this manual.

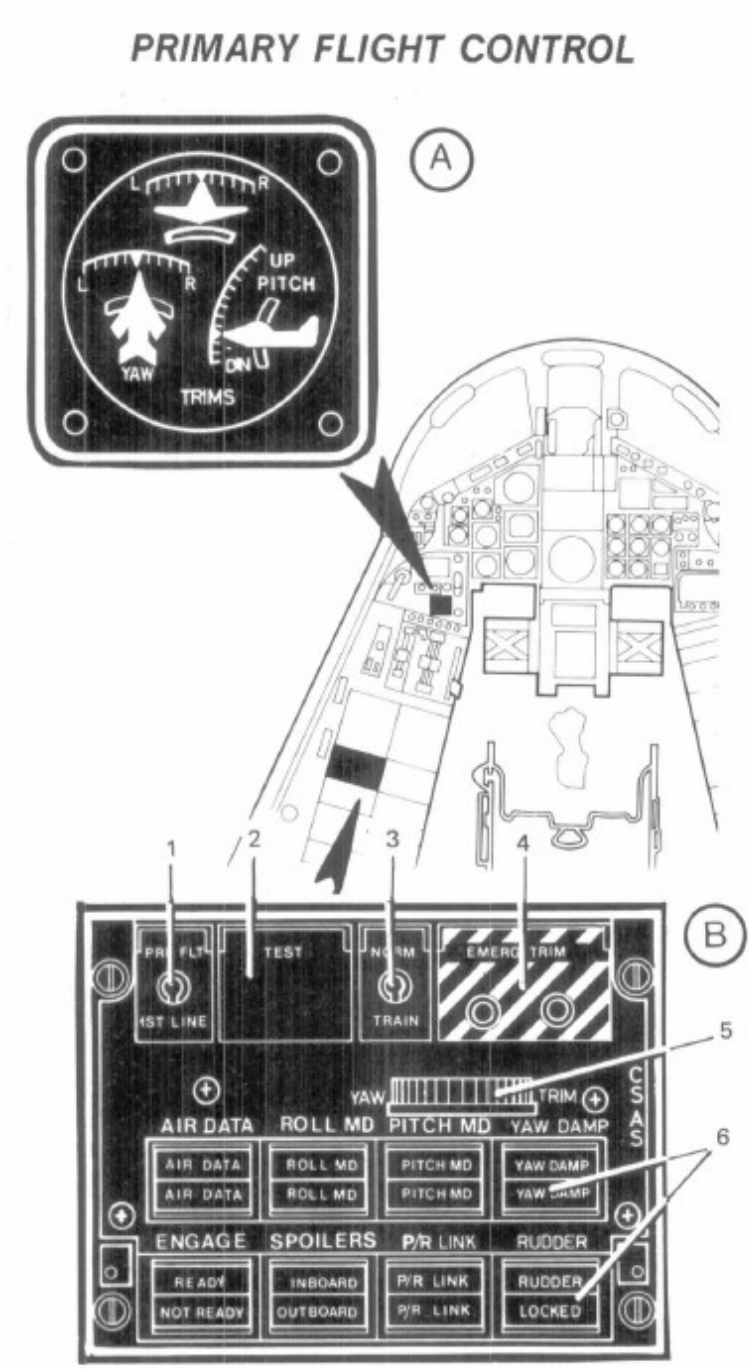

A Three axes trim indicator

B CSAS control panel
1 Pre flight/1st line check switch
2 Test pushbutton/indicator
3 Normal/training selector switch
4 Emergency trim switches
5 Yaw trim wheel
6 CSAS selector/indicator pushbuttons

NORMAL/TRAINING SELECTOR SWITCH
A two-position toggle switch, labelled NORM/TRAIN guarded to NORM position. This switch selects either normal or training mode of the CSAS.
In the TRAIN position the pilot can simulate the following CSAS failures by pressing the appropriate push button/indicators.

- SPOILERS — Inboard and outboard spoilers
- PITCH MD, ROLL MD or YAW DAMP —Pitch, roll or yaw second failure i.e., reversion to direct link mode.
- PITCH MD and ROLL MD simultaneously — Air data second failure mode
- P/R LINK — Reversion to mechanical mode
- RUDDER — Rudder locking

Failures will be indicated by illumination of the appropriate push button(s). Upon completion of tests the NORM/TRAIN switch shall be set to NORM and the guard shall be closed.
If the NORM/TRAIN switch is set to NORM and the failures are not cancelled, spoilers and yaw damp will be reset automatically. Sudden large signal changes occurring during a simulated failure will be fed gradually into the system over a period of approximately 10 seconds by the voter monitor faders.
Pressing the P/R LINK button will extinguish this lamp and the ROLL MD lamp is the taileron is disengaged in the mechanical mode. In addition, the PITCH MD button shall be pressed to revert to full CSAS mode.

NOTE
This procedure can be performed regardless of the NORM/TRAIN switch position.

When the rudder is disengaged the roll mode reverts to direct link automatically. A complete reset can be initiated by positioning the NORM/TRAIN switch to NORM position and pressing the RUDDER and ROLL MD push buttons.

EMERGENCY TRIM SWITCHES
Two three-position toggle switches, guarded to the center (off) position. The switches are labelled PITCH — DOWN/UP and ROLL— L/R respectively. When the black and yellow hatched guard plate is lifted the control

stick trim switch is inoperative and the emergency trim switches on the CSAS control panel are used to operate emergency trim.

YAW TRIM WHEEL
A thumb wheel labelled YAW TRIM. Turing the wheel will reposition the rudder actuator.

NOTE
Do not move rudder pedals when YAW TRIM is used.

CSAS SELECTOR/INDICATORS

Two rows of illuminated push button labelled and marked as shown in figure.

THREE AXES TRIM INDICATOR

A three-pointer indicator, labelled TRIMS, indicating pitch, roll and yaw trim position on separate displays, is located on the left hand quarter panel. Indications are as follows:

ROLL—L/R

PITCH— UP/DN

YAW — L/R

NOTE
The neutral trim positions are indicated by a triangular marker on each scale.

Rudder Pedals

The rudder pedals are used to input yaw commands. They operate conventionally and are adjustable. The rudder pedals are used for braking and nose wheel steering.

Rudder Pedal Adjustment

A ring, labelled PEDAL ADJUST (79, Figure F0-2; 67, Figure FO-4), when pulled out to its full extent allows the pilot to adjust the rudder pedals according to his own personal requirements. When released, it locks both pedals in the selected position.

CSAS Failures

In failure conditions, caused by unserviceable components or circuitry, the CSAS capability is preserved as long as possible by triplex/quadruplex redundancy. CSAS failures are classified as first and second failures.

NOTE for Microsoft Flight Simulator:

In this rendition the fligh control system is not flagged as a “fly-by-wire” and basically acts always as a hydraulically-actuated direct link. Procedures and indicators will work as in real-life, but the primary flight control will always work as long as hydraulic power is available.

First Failures

Any failure detected in the CSAS computing or actuator loop or air data source signals will not degrade the CSAS performance; the redundancy capability only is reduced. The classification is not applicable to the spoilers as a first failure in the spoiler command or actuating system will cause retraction of the affected pair of spoilers.
First failures are indicated by the amber CSAS and PFCS captions on the CWP and the relevant amber (spoilers red) caption(s) on the CSAS control panel. First failures caused by hydraulic control circuit failure or those caused by loss of both generators or both TRUs are additionally indicated on the CWP by those captions which are shown in the relevant Emergency Procedures of Section 3.

Second Failures

Second failures are subdivided into critical and significant.
Second failures are indicated by a red CSAS/CWP caption together with amber CSAS and PFCS/CWP caption with associated red push button indicator(s) on the CSAS control panel.

CONTROL STICK GRIP

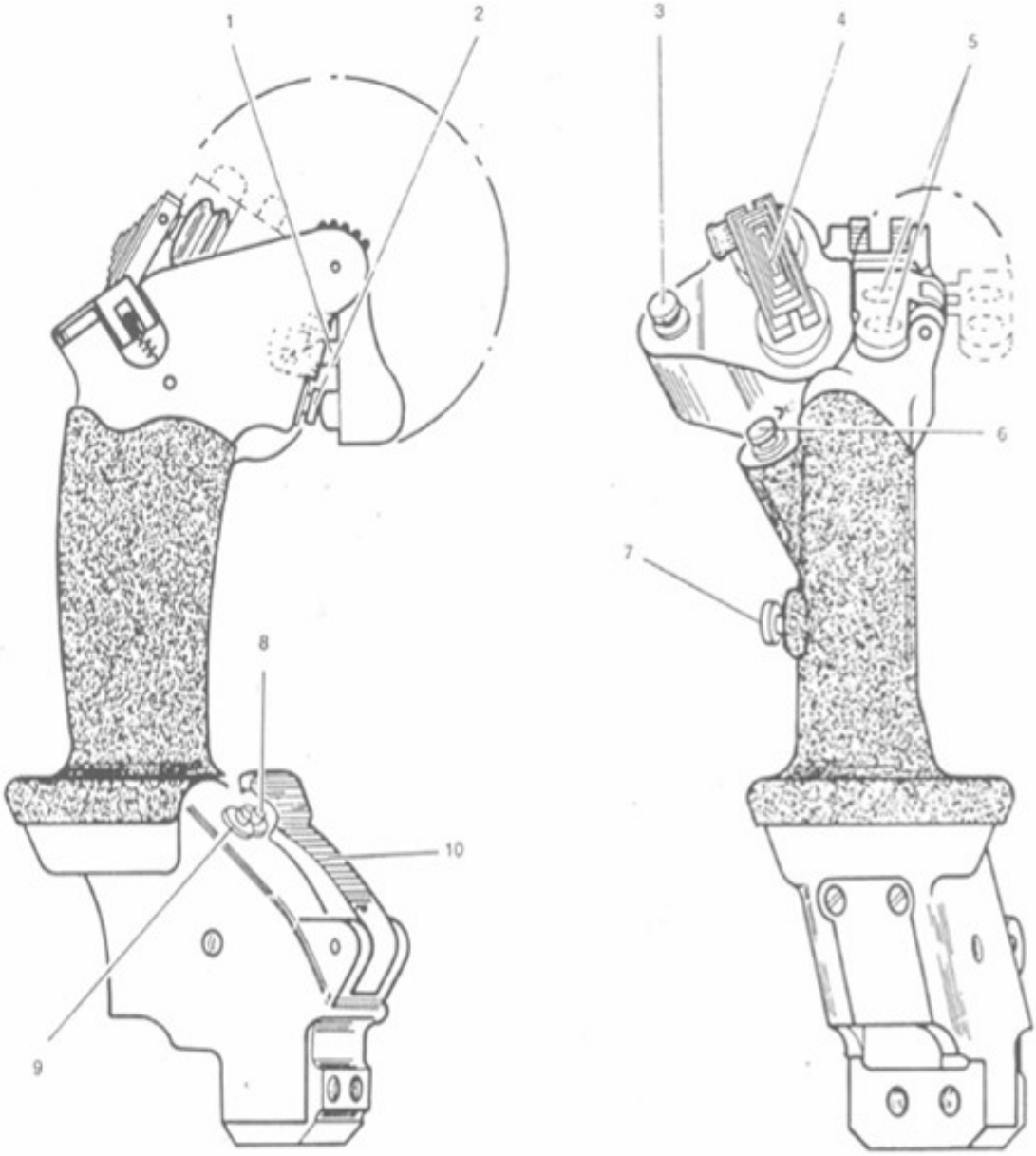

1 GUN FIRING BUTTONS
2 HUD CAMERA BUTTON
3 AUTOPILOT ENGAGE/DISENGAGE BUTTON
4 TRIM BUTTON UNIT
5 WEAPON RELEASE BUTTON
6 PTT BUTTON
7 RECCE CAMERA BUTTON
8 AP INSTINCTIVE CUT-OUT SWITCH
9 NWS INSTINCTIVE CUT-OUT SWITCH
10 ICO BAR

Critical Second Failures

A critical second failure causes reversion to mechanical mode or centering and locking of the rudder.

Failure Resetting

A reset attempt may be made by pressing the relevant lit push button/indicator. In case of a second failure, then lit push buttons of the back row shall be pressed first since CSAS failure logic will not allow a reset otherwise.
If a reset is unsuccessful, the PFCS/CWP caption stays illuminated as a reminder that a failure state exists. Subsequently the central warning system is reactivated.

NOTE
For CSAS failure indications see figure.

Central Warning Panel Captions

The CWP in the front cockpit (3, Figure 4-86) contains the following primary flight control system amber and red indications:

- Amber PFCS light up when the first "first failure" within the CSAS occurs. It comes on with the associated amber (SPOILERS — red) pushbutton indicator on the CSAS control panel. Provided it is a transient failure, both the warning can be cancelled by pressing the illuminated buttons on the CSAS control panel.
- Amber CSAS lights up whenever any failure within the CSAS occurs. It comes on in conjunction with the associated amber or red pushbutton indicator and, when the "first" failure occurs, with the amber PFCS caption on the CWP. The amber CSAS caption can be cancelled anyway by pressing the illuminated CSAS pushbutton. Subsequent failures reactivate the amber CSAS warning caption.
- Red CSAS lights up whenever either a second "significant" or "critical" failure within the CSAS occurs. It indicates a reversion to direct link in the case of a significant failure, or to mechanical mode in the case of a critical failure. It comes on in conjunction with the associated red push button indicator and the amber CSAS warning caption, besides the lyre bird tone. All these warnings can be cancelled by pressing the illuminated push button indicator on the CSAS panel. Subsequent "significant" or "critical" failures reactivate all the warning. The red CSAS caption is repeated on the CWP in the rear cockpit.

SPIN PREVENTION AND INCIDENCE LIMITING SYSTEM (SPILS)

Post mod. 00555 the Spin Prevention and Incidence Limiting System (SPILS) is introduced. The SPILS comprises- a computer and a control panel. The computer receives duplex pitch rate and dynamic pressure signals from the CSAS pitch computer, duplex roll and yaw control demand signals from the CSAS lateral computer, and duplex AOA signals from the two AOA probes. The signals are processed within the SPILS computer to provide progressive triplex control demand cancel signals to the CSAS to limit the maximum AOA attainable, and to reduce control authority in roll and yaw at high AOA. Computer outputs to the CSAS are disconnected when the weight-on-ground switches are open (aircraft on the ground), if the autopilot is engaged, or if the AOA is below the threshold value.

NOTE

- Interruption/resumption of SPILS operation caused by AP engagement will not be indicated to the pilot. Any AP disengagement, e.g., at initiation of an OLPU, will cause immediate reengagement of the SPILS, provided that SPILS is in ON.
- A CSAS failure can cause illumination of the red SPILS/CWP caption which will result in SPILS disengagement.
- In the case of a SPILS disconnect in flight, a reset of the system in straight and level flight can be attempted.

NOTE for Microsoft Flight Simulator:

While the SPILS indication and procedures are correctly emulated in MSFS, the system is not actually implemented, so spin prevention WILL NOT work and it is possible that, if not correctly operated, the aircraft may enter in a spin. Spin can be sometimes controlled if enough altitude is available, but uncontrollable spin conditions may occurr.

FUNCTION OF CSAS BUTTONS/INDICATORS

PUSH BUTTON	INDICATION	COLOUR	REASON AND CONSEQUENCE
AIR DATA	AIR DATA	AMBER	First air data failure
	AIR DATA	RED	Second data failure Reversion to fixed gain in the yaw SAS
ROLL MD	ROLL MD	AMBER	First failure in roll MD-loop, or roll yaw crossfeed, or first air data failure. Normal roll CSAS operation. No performance reduction. Air data failures are indicated simultaneously on Roll and PITCH buttons.
	ROLL MD	RED	Significant second failure in roll MD-loop including rate gyros. A single failure within roll MD-loop and a single roll stick pick-off failure. Two failures within the cross-feed. Reversion to direct electrical link. Second air data failure, simultaneous PITCH MD (RED) indication. Reversion to fixed gain in the yaw SAS.
PITCH MD	PITCH MD	AMBER	First failure in pitch MD-loop or in the air data system. Normal pitch CSAS operation. No performance reduction. Air data failures are indicated simultaneously on PITCH and ROLL buttons.
	PITCH MD	RED	Significant second failure in MD-loop including rate gyros. A single failure in pitch stick pick-off and pitch MD-loop, if different lanes are affected. Reversion to direct electrical link. Second failure in air data system is indicated together with ROLL MD (RED). Reversion to fixed gain in yaw SAS.
YAW DAMP	YAW DAMP	AMBER	First failure in yaw SAS loop or response of one monitor. Yaw damper operating normally. No performance reduction.
	YAW DAMP	RED	Significant second failure in yaw SAS. Loss of yaw rate. Reversion to yaw direct link. No yaw damper. Reduction of roll/yaw performance.
ENGAGE	READY	GREEN	The CSAS is ready for engagement. after engagement the failure logic is reset, all failure indications are cancelled. With no failures a partial engagement is also possible by pushing the mode switches in proper sequence.
	NOT READY	RED	Power on CSAS illuminates NOT READY button. CSAS engagement with ENGAGE button not possible.
SPOILERS	INBOARD	RED	First failure in inboard spoiler servo-loop detected by roll monitor, illuminates indicator light. Inboard spoilers retracted simultaneously with the first failure detection. Reduction of roll performance.
	OUTBOARD	RED	First failure in outboard spoiler servo-loop detected by roll monitor, illuminates indicator light. Outboard spoilers retracted simultaneously with the first failure detection. Reduction of roll performance.
P/R LINK	P/R LINK	AMBER	First failure in pitch or roll direct electrical link. First failure in taileron servo-loop. Small performance reduction in pitch and roll with loss of one hydraulic system.
	P/R LINK	RED	Second critical failure in taileron systems, pitch or roll direct link paths. No more CSAS control. Large performance reduction with mechanical control.
RUDDER	RUDDER	AMBER	First failure in direct link, or rudder actuator, servo loop. Rudder system operating normally. Small performance reduction with loss of one hydraulic system.
	LOCKED	RED	Critical second failure in rudder system or yaw direct link path. Rudder centered in neutral position. No rudder control and yaw damping.

Computer Functions

PITCH AUTHORITY

Gain-scheduled taileron position and pitch rate signals from the CSAS are summed with the most nose-up output of the AOA probes, the result being fed to a threshold detector and a level switch which engages the SPILS at 12.7 units with increasing AOA and disengages it at 10.6 units with decreasing AOA. After threshold detection the signal is gain-scheduled with dynamic pressure and, after triplex averaging, is fed via a triplex output switch to the CSAS pitch computer to reduce the taileron nose-up demand signal progressively as AOA increases. Ultimately, the AOA is limited to a maximum of between 25 and 28 units AOA depending on stores configuration and CG position.

ROLL AND YAW AUTHORITY

Roll and yaw signals from the CSAS are gain-scheduled with the most-nose-up output from the AOA probes and fed, via triplex averagers and output switches, to the CSAS lateral computer as progressive roll/yaw control demand signals thus, above the switching value of AOA, effectively reducing roll/yaw control authority in proportion to AOA. At the limiting AOA, roll and yaw control authority is limited to approximately 20% of the full CSAS control authority.

TRIPLEX AVERAGERS/FADERS

The triplex averagers generate triplex-equalized outputs from averaged duplex inputs. In the event of a full-initiated disengage signal from the failure logic, the triplex output signal is replaced by a stored signal that fades more and more rapidly to zero over a period of 10 seconds in order to avoid control transients.

FAILURE LOGIC

Inputs to the monitor in the failure logic are gated together so that any interlane disparity greater than the monitor trip level initiates a fault-disengage signal to the appropriate triplex averagers. When the signal has faded to zero, the triplex output switch opens to disengage the switch from the CSAS. The SPILS is also disengaged via the triplex output switches if the aircraft is on the ground when the autopilot is engaged or when the AOA is below the setting of the level switch. In the event of a fault condition or logic disengagement the attention-getters, lyre-bird audio warning, CWP red SPILS caption and the FAIL caption on the spils control panel are activated. SPILS computer information is fed to the CMP and crash recorder.

SPILS CONTROL AND INDICATORS

The controls and indicators associated with SPILS are shown in. SPILS block diagram and simplied functional diagram are shown in figure.

SPILS Control Panel

The SPILS control panel includes the following controls and indicators:

SPILS ON/OFF SWITCH

A two-position toggle switch, labelled ON/OFF is located on SPILS CP, left console, and connectors power supply to the system.

SPILS BITE/FAIL PUSH BUTTON/ INDICATOR

The split legend pushbutton/indicator is labelled BITE/FAIL. The upper white BITE caption flashes after a successful BITE run. The lower amber FAIL caption illuminates if power is applied to the aircraft, irrespective of SPILS ON/OFF with position, and extinguishes after the SPILS switch is set to ON and the BITE/FAIL button is pressed. In the event of unsuccessful BITE the FAIL caption will illuminate together with the white BITE caption.
Following a SPILS failure in flight, the FAIL caption will be lit. A reset of the system can be made by pressing the pushbutton/indicator after at least 12 seconds have elapsed and providing the AOA is less than 10 units (i.e., below SPILS disengagement level).

Central Warning Panel

The CWP in the front cockpit contains the following SPILS system indication:

- On ground the red SPILS/CWP illuminates if the BITE detects a failure, or when power is initially applied to the aircraft, with the SPILS power switch in ON or OFF.

- In flight SPILS illuminates after a genuine SPILS failure.

SPILS CONTROLS AND INDICATORS

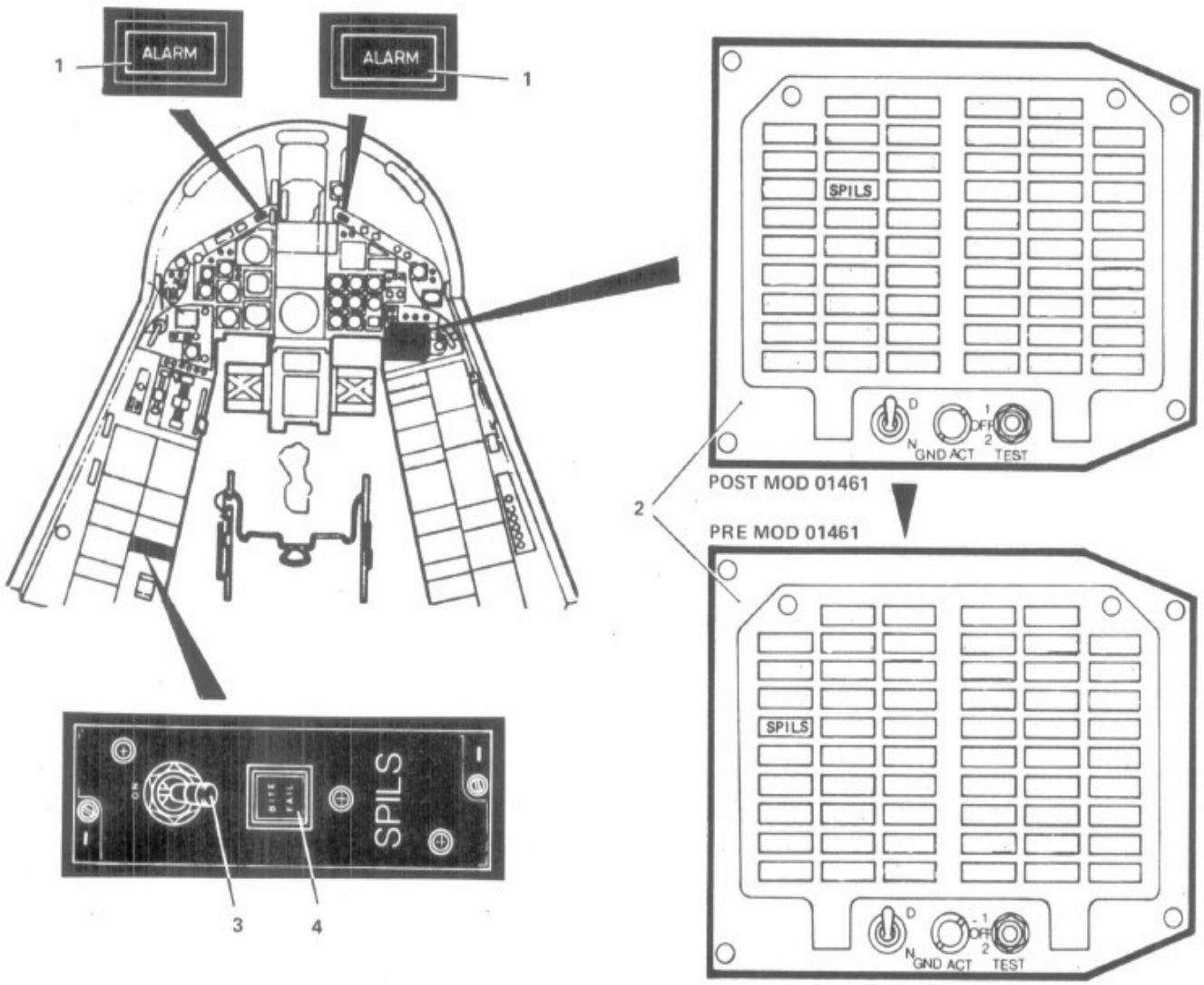

1 Attention-getters
2 Central warning panel
3 SPILS ON/OFF switch
4 SPILS BITE/FAIL pushbutton/indicator

NOTE

In flight the red SPILS/CWP caption illuminates after selecting the SPILS power switch to OFF.

ATTENTION GETTERS

The two-attention getters, located in the upper section of the left and right antiglare shields, start flashing when SPILS warning is displayed on CWP. Pressing anyone of the attention getters cancels the attention getter. CWP is unapparted by this action.

SPILS COMPUTER FUNCTIONS

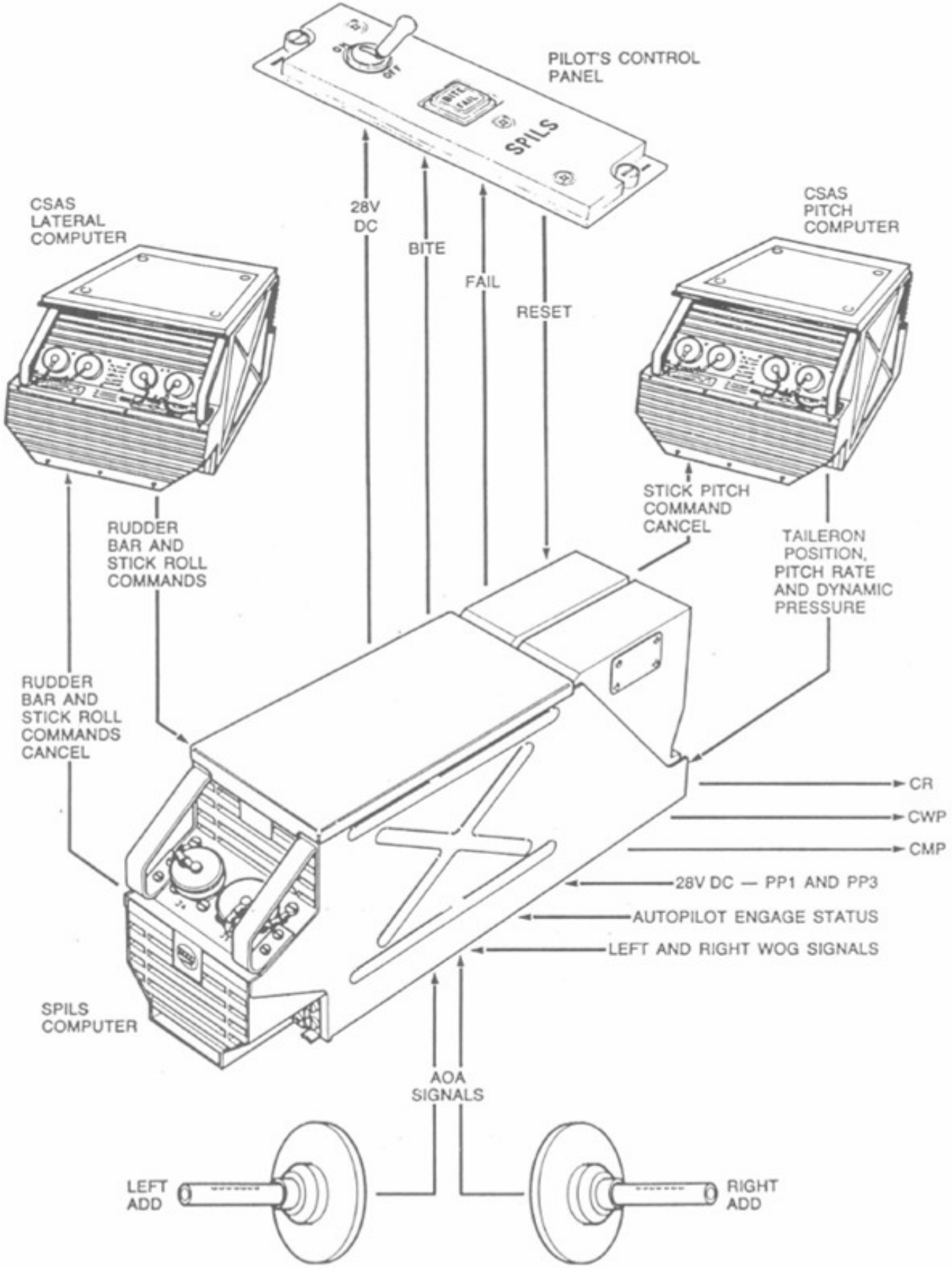

SPILS BITE

The SPILS BITE is activated on the ground in conjunction with the CSAS BITE with either PRE FLT or 1ST LINE selected. The BITE/FAIL pushbutton/indicator on the SPILS control panel shows the system status: the white BITE and amber FAIL captions come on steadily if the system fails the BITE; after a normal BITE cycle the white BITE caption flashes and it can then be extinguished by pressing the TEST/GO/NO GO pushbutton/indicator on the CSAS control panel. The SPILS BITE function is inhibited in the air through the action of either main gears oleo switch. The brightness of the BITE/FAIL indicator is controlled by the D/N switch on the CWP, and the filaments are tested by the CONSOLES L TEST switch on the right console.

SYSTEM MALFUNCTION

After a SPILS failure (red SPILS caption on the CWP and amber FAIL caption on the SPILS control panel), an attempt to reset the system can be made by pressing the BITE/FAIL push button/indicator on the SPILS control panel provided 12 seconds (fade-out time) have elapsed since the failure indication and the AOA is less than 10 units (i.e., below the SPILS disengagement level). After a failure, the SPILS computer is automatically isolated from the CSAS. The SPILS ON/OFF switch may be selected to OFF if desired if a reset attempt is unsuccessful.
SPILS shall be regarded as failed after a CSAS second failure whether SPILS failure indication are present or not.

Electrical Supplies

The SPILS is fed with 28 V DC from PP1 and PP3 and continues to operate normally on either busbar after a power failure to one busbar. The ON/OFF switch controls the selection of power to the system; it has no logic reset function. When ON is selected the equipment is immediately operational.

SECONDARY FLIGHT CONTROL SYSTEM

The secondary flight control system comprises wing sweep, slats, flaps, Krueger flaps, airbrakes and their control subsystems including the lift dump feature. The systems are electrically and mechanically controlled and hydro-mechanically operated by the left and/or right utility hydraulic systems.

NOTE for Microsoft Flight Simulator:

In this Microsoft Flight Simulator rendition, the FLAPS LEVER control is used also to control wing sweep and maneuver flaps. This is done to simulate wing sweep drag, lift and center of lift positioning and retain multiplayer animation compatibility. In order to do this, 7 different flap positions are defined the in-game, and are associated to different wing and flap configurations as follows:

Position 0 (fully retracted) WING FULLY SWEPT: Wing Sweep 67°, Flaps 0°, Slat 0°, Krueger Flaps 0°

Position 1 (fully retracted): Wing Sweep 63°, Flaps 0°, Slat 0°, Krueger Flaps 0°

Position 2 (fully retracted): Wing Sweep 45°, Flaps 0°, Slat 0°, Krueger Flaps 0°

Position 3 WING FULL FWD, FLAPS UP: Wing Sweep 25°, Flaps 0°, Slat 0°, Krueger Flaps 0°

Position 4 MANEUVER FLAPS: Wing Sweep 25°, Flaps 7°, Slat 11°, Krueger Flaps 0°

Position 5 MID FLAPS: Wing Sweep 25°, Flaps 26°15', Slat 24°30', Krueger Flaps 0°

Position 6 (fully extended) FULL FLAPS: Wing Sweep 25°, Flaps 50°, Slat 24°30', Krueger Flaps 116°30'

NOTE: Position 0 should not be selected if 2250l underwing tanks are installed.

Selecting flap and wing positions above the appropriate speed limits may cause in-game flaps damage.

WING SWEEP SYSTEM

The wing sweeping facility is provided for optimization of the wing sweep angle for each flight conditions. Each wing can rotate around pivot incorporated in the fixed section of the wing and is moved by an actuator; wing sweep is mechanically controlled and hydro-mechanically operated. Wing sweep may be varied between 25 degrees and 67 degrees. Full sweep will take approximately 7 seconds.
Moving the wing sweep lever to the rear will increase wing sweep angle and vice versa.

The wing sweep lever is mechanically interconnected with the flap lever to prevent selection of the flaps unless the wing sweep lever is fully forward, and to prevent movement of the wing sweep lever if the flap lever is not in the UP position.
The wing sweep angle is adjusted by two screw actuators, one for each wing. The left actuator is powered by the left utility system and the other by the right. To prevent asymmetric operation, the actuators are interconnected by a synchronizing shaft, which also allows one actuator to mechanically drive the other in case one utility system fails. Wing sweep is controlled by the wing sweep lever through the high lift and wing sweep control assembly (HLWSCA). This assembly consists of two units: the high lift control unit and the wing sweep control unit. It converts the wing sweep lever position into appropriate hydraulic flow signals, driving the wing sweep actuators. Mechanical feedback shafts driven by each actuator are used to stop the flow signals, whenever the desired wing sweep angle is reached. The mechanical feedback shafts are also used to detect any symmetric operations. The asymmetry detector monitors rotation of the wing sweep actuator feedback shafts and stops both actuators by shutting off hydraulic flow, whenever an asymmetry is detected.

WING SLATS, FLAPS AND KRUEGER FLAPS

The wing slats, flaps and Krueger flaps are electrically controlled and hydro-mechanically operated. The flaps on both wings are jointly driven by screws actuators through a set of shafts and gearboxes.
The slats on both wings are jointly driven in the same manner as the flaps. Loth sets of shafts incorporate telescoping sections to accommodate length variations due to wing sweep. The shafts also are equipped with torque limiters to prevent overstressing of the drive train. The Krueger flaps are separately driven by hydraulic actuators. Slat and flap motors receive power from both utility system. The Krueger flap actuators are powered from the left utility system only.
As long as the wing are selected fully forward, the flaps lever may be moved to any of its three positions UP, MID, and DOWN, the MID position being indicated by a light mechanical detent. Each of these positions results in appropriate electrical signals, which are routed to the HLWSCA. In this unit corresponding hydraulic flow signals are initiated to drive the slats and flaps into the commanded position.

NOTE for Microsoft Flight Simulator:

In this Microsoft Flight Simulator rendition, the FLAPS LEVER conrtol is used also to control wing sweep and maneuver flaps.

WING SWEEP	HIGH LIFT LEVER pos.	FLAP	SLAT	KRUEGER FLAP
25°	UP	0°	0°	0°
25°	MID	26°15′	24°30′	0°
25°	DOWN	50°	24°30′	116°30′

WING SWEEP	MANEUVER SWITCH pos.	FLAP	SLAT	KRUEGER FLAP
25°	UP	0°	0°	0°
25°	DOWN	7°	11°	0°
25 ÷ 45°	DOWN	0°	11°	0°
45 ÷ 68°	DOWN	0°	0°	0°

CAUTION

SELECTION OF FLAPS FROM UP TO DWN OR FROM DWN TO UP SHOULD NOT BE MADE WITHOUT A PAUSE OF APPROXIMATELY 2 OR 3 SECONDS IN THE MID POSITION. DO NOT SELECT NEW SITTING OF FLAP DURING FLAP TRAVELLING.

Mechanical feedback linkages associated with the slats and flaps actuators drive cam switches, which causes the hydraulic flow from the HLWSCA to stop whenever the appropriate slats and flaps position is reached.

The Krueger flaps extend only when the flaps lever is selected DWN and the flaps are in a position lower than MID. Retraction of the Krueger flaps will take place when the flaps lever is selected from DWN to MID. No immediate positions of the Krueger flaps are provided. Pitching moments resulting from the flap extension/retraction are largely compensated for by the CSAS.

FLAPS/SLATS ASYMMETRY PROTECTION

Flaps and slats on both wings are monitored by an electrical asymmetry detection system. The system provides asymmetry protection in the event of a failure of one drive shaft.
Flaps asymmetry: in the event of a flaps asymmetry is detected, the flaps will be locked at the position where the asymmetry occurred and remain inoperative. Locking the flaps between MID and DOWN prevent slats from retracting.

NOTE

No warning indication is available to the pilot. The emergency flap switch cannot override a flap asymmetry. The wing sweep system is then inoperative.

Slats asymmetry: in the event a slats asymmetry is detected the slats will be locked at the position where the asymmetry occurred and remain inoperative. Flaps can be operated from UP to MID, but not from MID to DWN. The DWN position can be reached in this case using the flap override switch which allows flaps to be inched DWN. Krueger flaps asymmetry will be indicated by a black and white striped display of the KRUEGER FLAPS indicator. This is not considered critical, and no consequence are to be expected in the flap/slat operation.

AIRBRAKES

The airbrakes are located on the upper shoulders of the rear fuselage, on either side of the fin. Each airbrake is operated by a hydraulic actuator supplied from the No. 2 (right) hydraulic system and controlled by an electro-hydraulic selector valve supplied from the DC essential bulbar. The actuators are mechanically connected to a synchronizing valve, which keep the airbrakes synchronized within 5 degrees.
The airbrakes are locked in the closed position by additional hydraulic locking actuators and mechanical locks.
Airbrakes selection is by operation of the combined airbrakes/manoeuvre flap/slat switch. Forward and rearward movement of the switch selects airbrakes in and out respectively. The switch is springloaded to center (neutral). The airbrakes positioning is scheduled against Mach number.
Full extension of the airbrakes will normally take approximately 4 seconds, while retraction is achieved within approximately 2 seconds.
If thrust reverse is selected in flight with airbrakes extended the airbrakes automatically retract when the 'WOG switches are closed, i.e., immediately after touchdown.

CAUTION

- DO NOT USE THRUST REVERSE WITH RIGHT UTILITY SYSTEM FAILURE UNLESS THE AIRBRAKES ARE LOCKED IN.
- EACH TIME AN INDICATION OF AIRBRAKES NOT LOCKED OCCURS, TR SHALL NOT BE USED.

If a failure occurs within the airbrake scheduling box automatic scheduling is lost and airbrakes extension is controlled by a redundancy switch series.
In the event the airbrakes extension exceeds the correct value, the redundancy switch series sends a signal to the "emergency IN" selector valve; this discharges supply pressure to the airbrake actuators, allowing aerodynamic drag to push the air brake in. When the correct position is reached it is automatically maintained by hydraulic lock. In this condition, when reducing aircraft speed, the airbrakes can still be further extended to the next step manually only provided the system has been reset. To reset the system the control switch shall be moved first to the IN position, and to the OUT position.

SCHEDULED AIRBRAKES EXTENSION	
Mach No.	Airbrake Angle
< 0.82	50°
> 0.82 < 0.85	45°
> 0.85 < 0.89	40°
> 0.89 < 0.92	35°
> 0.92 < 1.15	30°
> 1.15 < 1.45	22.5°
> 1.45	15°

The amber CONFIG warning caption comes on whenever the airbrakes exceed the scheduled position.
If a second failure occurs within the T.T.U. the "emergency IN" selector valve allows the aerodynamic drag to

push the airbrakes within approximately 5 degree of closed. The airbrakes extended, selecting the guarded EMERGENCY AIR BRAKE switch to IN operates the release valve, and allows the airbrakes to blow in, but they do not lock.

LIFT-DUMP SYSTEM

The lift-dump (LD) system provides for simultaneous extension of all four spoilers following touchdown. Lift-dump can be used separately or together with reverse thrust and can be pre-armed to operate automatically upon touchdown. With the throttles in the dry power range, if the left throttle alone is rocked outboard, lift-dump is selected. If the right throttle is rocket outboard, both lift-dump and thrust reverse are selected. Outboard pressure on the throttles when in the HP shut position, or in the reheat range, should not select lift dump and rectification action is necessary if such pressure does actuate the system.
Following selection, and provided the weight is on the wheels, signals are transmitted to the commutation amplifier in the CSAS lateral computer to provide simultaneous extensions of all four spoilers. The system remains engaged once activated and can only be cancelled by rocking the throttle inboard, regardless of WOG switch position.

NOTE for Microsoft Flight Simulator:

Lift Dump preselection is associated to the "TOGGLE WATER RUDDER" command – however the key binding is DISABLED by default. Additional key bindings must be enabled in the WSO menu first.

SECONDARY FLIGHT CONTROL SYSTEM CONTROLS AND INDICATORS

Throttle Quadrant

The throttle quadrant in the front cockpit carries the following secondary flight controls:

THROTTLES
The throttle can be rocked individually or together to an outboard position in the dry power range. Rocking the throttles out arms the lift dump and thrust reverse system. The left throttle arms/operates the lift dump system only. The right throttle arms/operates reverse thrust and since this movement is transmitted to the left throttle, lift dump will be pre-armed/operated.

MANOEUVRE AND AIRBRAKE SWITCH
A five-position pyramid type, manoeuvre and airbrake toggle switch is located on the right side of the right throttle. The switch is marked MNVR UP/MNVR DOWN/ CENTER/AIRBRAKE IN/AIRBRAKE OUT and spring-loaded to the center position.

NOTE

When selecting manoeuvre slats/flaps, only a momentary push of the switch is required to extend or retract. I folding the switch aft will extend the airbrakes as far as the schedule will allow, while a momentary forward push will cause the airbrakes to retract fully.

FLAPS LEVER
A lever marked FLAPS — DWN/MID/UP, moving forward and aft controls the flaps and slats. In the DWN position the Krueger flaps are also extended.

WING SWEEP LINER
A wing sweep lever selects wing sweep angles between 25 degrees (lever in the fully forward position) and 67 degrees (lever in the fully aft position). The fixed scale is marked in 1 degree increments and marked in 5 degrees increments from 25 to 68 degrees.

To operate the lever, the release trigger shall be pressed for the time a selection is being made. A detend is provided in the 45 degrees position.

Secondary Control Surface Position Indicator

A four pointer secondary control surfaces position indicator, marked FLAP SLAT — AIR/BR — WING contains the following indicators:

- The FLAP SLAT section shows the flap position UP/MVR/MID/DWN and slat positions UP/MVR/DWN.
- The AIR/BR section shows airbrake position OUT/IN. OUT equaling 50 degrees of deflection. Center mark equals half extension. IN indicates that both airbrakes are fully retracted. Signals from switches on each locking mechanism will bring the pointer beyond the IN position, indicating that the airbrakes

are locked.

- The WING section shows wing sweep angle between 25 and 70 degrees against a scale graduated in 5-degree increments and marked in 10-degree increments.

Throttle Rock Test Indicators

The throttle rock test indicators located on the engine test panel, are two magnetic indicators, marked THROTTLE ROCK — TEST
LEFT/RIGHT, which show the result of throttle rock test on ground. A white display indicates reverse thrust and lift dump circuits are serviceable. Black and white striped display indicates a circuit malfunction.

Emergency Airbrakes and Emergency Flap Switches

A two-position toggle switch, marked EMERGENCY — AIRBRAKE IN/OFF, is guarded to the OFF position by a black and yellow striped cover. Selected to IN the airbrakes are released to allow aerodynamic forces to drive the airbrakes surfaces toward the retracted position.
A two-position toggle switch, marked EMERGENCY — FLAP NORM/ ORIDE, is guarded and spring-loaded to the NORMAL position. It is used to extend flaps from MID to DOWN position in cases of slat failure.

Krueger Flaps Indicator

A three-position magnetic indicator marked KRUEGER FLAPS, displays:

Blank-grey - Krueger flaps UP and locked.

Black and white striped - Krueger flaps in transition or asymmetrically positioned or electrical power failed.

DN - Krueger flaps DOWN and locked

Lift Dump Indicator

The lift dump indicator is a three-position magnetic indicator marked LIFT DUMP and displays:

Grey - MLG strut not compressed. (Post mod. 01399: white cross on grey background).

OL - MLG strut compressed.

LD - Lift dump in operation

CSAS Control Panel Controls

The CSAS control panel includes the following secondary flight control system controls and indicators.
A combined push button/indicator marked SPOILERS with the captions INBOARD and OUTBOARD:

- The red INBOARD caption indicates a failure in the inboard spoilers servo loop and that the inboard spoilers are locked in the retracted position

- The red OUTBOARD caption indicates a failure in the outboard spoilers servo loop and that the outboard spoilers are locked in the retracted position

Pressing the button resets the logic system if the failure is temporary and releases the spoilers from the locked position.

Central Warning Panel

The CWP in the front cockpit contains the following secondary flight control system red and amber indications:

- Amber CONFIG illuminates whenever either the FLAPS lever in the MID position and an airspeed of 280 knots ± 10 is exceeded, or when the flaps lever is DOWN and an airspeed of 225 knots ± 10 is exceeded, or when the airbrakes exceed the scheduled extension.

- Amber SLAT illuminates whenever an asymmetry or a jam is in the slat system.

SECONDARY FLIGHT CONTROL (CONTROLS AND INDICATORS)

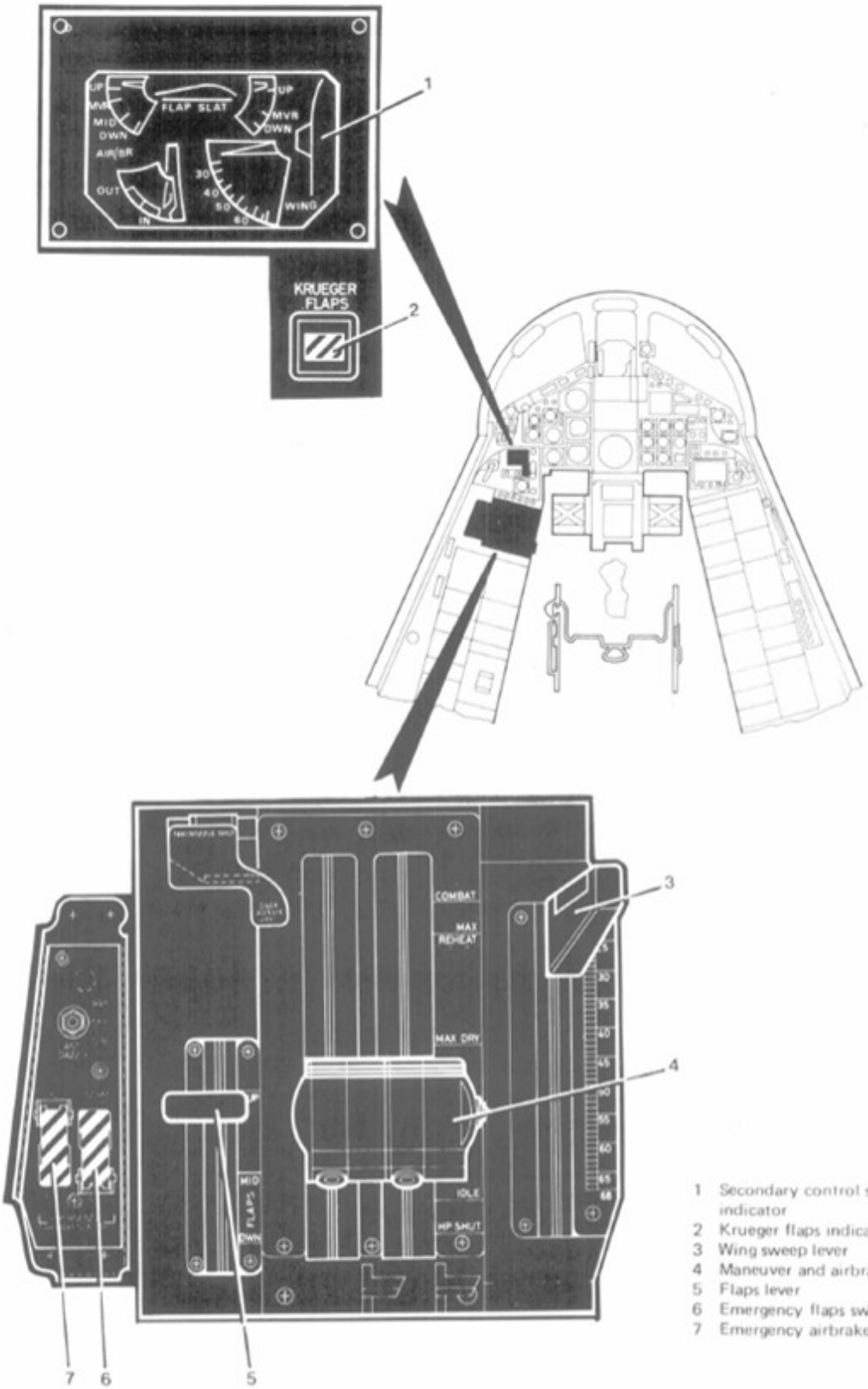

1 Secondary control surface position indicator
2 Krueger flaps indicator
3 Wing sweep lever
4 Maneuver and airbrake switch
5 Flaps lever
6 Emergency flaps switch
7 Emergency airbrakes switch

AUTOPILOT AND FLIGHT DIRECTOR SYSTEM

NOTE for Microsoft Flight Simulator:

The simulated autopilot uses, by and large, the functions of the default MSFS autopilot and will react to its normal key bindings. Its behavior, therefore, may differ from the real world aircraft. There is currently no key binding associated to the TF mode.

Automatic flight control, in a variety of modes is provided by an integrated digital Autopilot and Flight Director System (AFDS).
The AFDS provides Autopilot (AP), Autothrottle and Flight Director (FD) functions which can be used separately, or in conjunction provided compatible modes are selected. An equipment interlock prevents the use incompatible modes.
The autopilot, which can only be used in full CSAS mode, is duplex but not reversionary, the second channel being used only for comparison and channel output signal averaging. The ED is reversionary, and failure in one channel automatically results in the isolation of the channel, with the FD continuing to function via the serviceable channel. In certain modes a Stick Force Cut Out (SFCO) facility provides for automatic disengagement of the autopilot by the application of stick force. In other modes, application of stick force provides an Automatic Steering Override (ASO) facility to temporarily disengage the autopilot which re-engages upon reduction of stick force below the ASO threshold.
The AFDS incorporates two similar digital computers, AFDC1 and 2, arranged in duplex. AFDC1 is powered from XP1 AC busbar, and PP1 and PP3 (Essential busbar) DC busbars. AFDC2 is powered from XP3 AC busbar, and PP2 and PP3 (Essential busbar) DC busbars. The computers receive signals from the equipment listed in the following table.
Attitude and heading information from the IN (primary source) and SAHR (secondary source) is cross-monitored by the AFDS computers and together with signals generated by deviation from selected mode datums, is supplied to the CSAS as triplex analogue control demands. A discrepancy of more than 1° between the IN and SAHR causes an attitude monitor trip, resulting in automatic autopilot disengagement.
The autopilot is tested at pre-flight or 1st line level, according to selection, by Built-In Test Equipment (BITE). Airborne BITE operation is inhibited through oleo switches.

AFDS AND INTERFACING SUBSYSTEMS

The AFDS incorporates or is associates with the following components, sensors and indicators.

- AFDS Computers 1 and 2
- Stick Force Sensors
- Throttle Actuators
- Auto Trim Facility
- AFDS Control Panel
- HUD, CSAS, ADC, IN, SAHR, MC, TFR, RA
- ADI
- HSI
- Instinctive Cut-Out Switch
- Approach Progress Indicator (not operative)
- Autopilot Engage/Disengage Button
- Autopilot Engage Indicator
- CWP indicator and Central Maintenance Panel
- Automatic Steering Override

AFDS CONTROLS AND INDICATORS

AFDS Control Panel

The AFDS Control panel, located on the left console is used to select various AP and FD modes. A BITE TEST facility is located on the panel under a cover guard and is used to carry out serviceability checks on the ADFS system.
The BITE test cannot be initiated in flight.
Eight push button/indicator lights are provided on the panel for mode selection. When pressed, the relevant button will illuminate on receipt of a mode acceptance signal by the AFDS computers. Pressing a button for the secondary time de-selects the mode and extinguishes the light. The following controls and indicators are installed on the AFDS control panel:

FLIGHT DIRECTOR PUSH BUTTON
A push button/indicator labelled FD. Pressed once it illuminates white, indicating that the flight director system is selected. Pressed a second time it deselects the FD system and the light is extinguished.

IAS HOLD TOGGLE SWITCH
A three-positions INC/DEC, spring-loaded to the center position, increases or decreases the KCAS datum speed in the IAS hold mode at a rate of 1 kt/sec.

AUTOTHROTTLE PUSH BUTTON
A push button/indicator labelled THROT. Pressed once it illuminates white, indicating that the IAS hold (autothrottle) mode is engaged based on the calibrated airspeed at the time of selection. Pressed a second time the mode is disengaged and the light extinguished.

DATUM SPEED DISPLAY
A three-digit display labelled KCAS (knots calibrated airspeed). Indicates the selected datum speed in the IAS hold mode in KCAS.

APPROACH MODE PUSH BUTTON (NOT OPERATIVE)
A push button/indicator labelled APRCH. Pressed once it illuminates white, indicating that the approach mode is selected. At the same time the lights in the HDG and ALT push button illuminate. Pressed a second time it de-selects the mode and the APRCH light extinguishes. (HDG and lights remain illuminated).TRACK

ACQUIRE MODE PUSH BUTTON
A push button/indicator labelled TRACK. Pressed once it illuminates white, indicating that the track mode is selected. With AP engaged, the aircraft will automatically acquire and maintain the track which is determined by the MC, at the time of selection. Pressed a second time the mode is dc-selected and the light is extinguished.

HEADING ACQUIRE MODE PUSH BUTTON
A push button/indicator labelled HDG. Pressed once it illuminates white, indicating that the heading acquire mode is preselected. With AP engaged, the aircraft will automatically acquire and maintain the heading preset on the HSI. Pressing a second time de-selects the mode and the light is extinguished.

MACH HOLD MODE PUSH BUTTON
A push button/indicator labelled MACH. Pressed once it illuminates white, indicating that the Mach hold mode is pre-selected. With AP engaged, the aircraft will automatically maintain the Mach existing at the time of selection.

ALTITUDE HOLD MODE PUSH BUTTON
A push button/indicator labelled ALT. Pressed once it illuminates white, indicating that the barometric ALT hold mode is pre-selected. With AP engaged, the aircraft will automatically maintain the barometric height (BARO) existing at the time of engagement.

RADAR HEIGHT HOLD MODE PUSH BUTTON
A push button/indicator labelled RH. Pressed once it illuminates, indicating that the RH mode is preselected. With AP engaged, the aircraft will automatically maintain the radar altimeter height existing at the time of engagement.

TERRAIN FOLLOWING MODE PUSH BUTTON
A push button/indicator labelled TF (terrain following). Pressed once it illuminates white, indicating that the TF mode is selected and that AFDS is receiving commands from the TF computer. Pressed a second time the mode is de-selected and the light is extinguished.

CLEARANCE HEIGHT ROTARY SWITCH
A nine-position rotary switch, labelled CLEARANCE, preselects the clearance in the TF mode in feet over the surface. The switch position graduations are marked 200, 300, 400, 500, 750, 1000 and 1500.

TF RADAR READY LAMP
A green indicator lamp labelled READY. The lamp illuminates when the TF radar is ready for operation.

TF RIDE SELECTION SWITCH
A three-position toggle switch, labelled RIDE, with the position SOFT/MED/IHARD controls the sensitivity of the TF mode.

PRE FLIGHT/FIRST LINE SWITCH
A three-position toggle switch, guarded at the center position, with the positions PRE FLT/IST LINE.

Depending on switch position, a PRE-FLT or IST LINE test is initiated, when the BITE push button is pressed. For information relevant BITE checks refer to SECTION II.

FD STATUS INDICATOR
A two-section FD status indicator labelled FD GO (green) and FD NO (red). During the self-testing sequence, the FD GO light remains illuminated. On completion of self-test either the FD GO light remains illuminated or, if the FD integrity is suspect, the FD NO caption illuminates and the H) GO light is extinguished.

SELF-TEST ACTIVATING PUSH BUTTON
A push button/indicator labelled PUSH. Pressed once it illuminates white, indicating that the preselected self-test program is activated. When the light starts flashing, it indicates that the test requires manual participation by the pilot. Cancellation of BITE is achieved by pressing the BITE push button again and the light extinguishes.

AUTOPILOT STATUS INDICATOR
A two-selection autopilot status indicator labelled AP GO (green) and AP NO (red). During the self-testing sequence, the AP GO light remains illuminated. On completion of self-test either the AP/G0 light remains illuminated or, if the AP integrity suspect, the AP NO caption illuminates and the AP light is extinguished.

ATTITUDE FAIL INDICATOR
A white ATTD FAIL button/indicator which comes on if the attitude signals from the IN and from the SAHR differ by more than 1.5° in pitch and/or 3° in roll, or if a failure of the IN, SAHR or MC occurs. Pressing the button resets the attitude monitor if the fault is no longer present.

COMPUTER BITE INDICATOR
A two section indicator, labelled CMPTR 1 and CMPTR 2, illuminates white if a computer is carrying out a self-check BITE. A failed computer is indicated by an occulted computer caption.

NOTE

Pressing ICO inhibits an inflight BITE and prevents diagnosis of a failed AFDS computer.

Head-Up Display (HUD)

The HUD is an optical/electronic device which projects flight information in symbolic form, into the pilot's forward field of vision. The pilot's display unit (PDU) is installed above the center instrument panel in the front cockpit. The PDU can be used to display command signals emanating from the AFDS. With the mode selector switch on the HUD control panel selected to DIR and the FD activated, the FD symbol will appear in the PDU. If AP is engaged, the cue lines are suppressed. Thus, the pilot may utilize the HUD display to monitor operation of the AFDS in all modes. In the TF mode, radar reflection objects penetrating the clearance range will result in a pitch up demand signal being displayed on the HUD. Similarly, a failure in the RH mode will display a pitch up demand signal (for detailed information refer to INTEGRATED DISPLAY UNITS, para. Head Up Display Unit).

Approach Progress Indicator (Not operative)

Attitude Director Indicator

Routes roll and pitch information to ED. The relation between the attitude director indicator (ADI) and the autopilot is described under INSTRUMENTS.

Horizontal Situation Indicator

Routes steering information to FD. The relation between the horizontal situation indicator (HSI) and the autopilot is described under INSTRUMENTS.

Autopilot Engage/Disengage Button

The autopilot engage/disengage button engages the AP, consequently the AP engage indicator will illuminate. Pressing the button a second time will disengage the autopilot and the AP light will extinguish.

Autopilot Engage Indicator

The AP engage indicator illuminates green when the AP is engaged.

Instinctive Cut-Out Switch

The instinctive cut-out (ICO) paddle switch will immediately disengage the AP, FD, autothrottle and cancel all mode selections and preselections.

AFDS Central Warning Panel Captions

The CWP in both cockpits contains the following red and amber captions:

- Red AUTO P indicates and AP emergency disconnect either due to sensor failure or AP comparator trip.
- Red TER indicates a terrain following radar failure, resulting in an auto pull-up and wings level in the AP mode, or in a demand signal to be followed in the FD mode.
- Amber R ALT indicates a radar altimeter failure, resulting in a wings level and pull-up in the RH hold mode.

On the front cockpit CWP only:

- Amber TF MON indicates a 'IT primary/secondary source data input failure or failure in source data cross monitoring.
- Amber AP TRIM indicates an AP trim failure. The autotrim monitor automatically disengages autotrim.
- Amber AP MON indicates that one of the attitude sources (IN or SAHR/MC) has failed and that the primary or secondary attitude source has been selected automatically.

On the rear cockpit CWP only:

- Amber SAHR indicates a SAHR failure.
- Amber CMPTR indicates an MC failure and a reversion to pure IN navigation mode and some loss of weapons aiming facilities.
- Amber ADC indicates the loss of one or more data computer outputs.
- Amber IN indicates inertial navigator failure.

AFDS MODE COMPATIBILITY AND PRIORITY

The AP/FD computer contain mode selection and interlock logic circuits which exclude the selection of incompatible modes.
In general, more than one speed hold mode, or two modes requiring demands in the same axis may not be selected together. The last mode selection made on the AFDS control panel takes priority and overrides any incompatible mode previously made, with the exception of the Approach or TF mode and R1111.

OPERATING MODES

The desired AP or H) mode can be selected or deselected by the AFDS panel pushbuttons. Common mode selection is provided for both AP and FD, an interlocking logic prevents conflicting modes being selected. Modes using signals from invalid equipment cannot be selected. It is possible to preselect any mode prior to engagement of AP or FD. If a red AUTO P warning caption appears on the CWP, AP disengagement is initiated and all modes will be cancelled. If the U) is engaged prior to AP, the AP engages in the same mode, and the flight conditions existing at the time of engagement of the AP become the datum for both FD and AP.

The AFDS can be operated in the following modes:

Basic Modes:
- Attitude Hold
- Heading Hold

Cruise Modes:
- Heading Acquire
- Track Acquire
- Altitude Hold (BARO)
- Mach Hold
- Autothrottle (IAS-Hold)

Low Level Modes:
- Terrain Following
- Radar Height Hold
- Auto Approach (Not operative)

AFDS

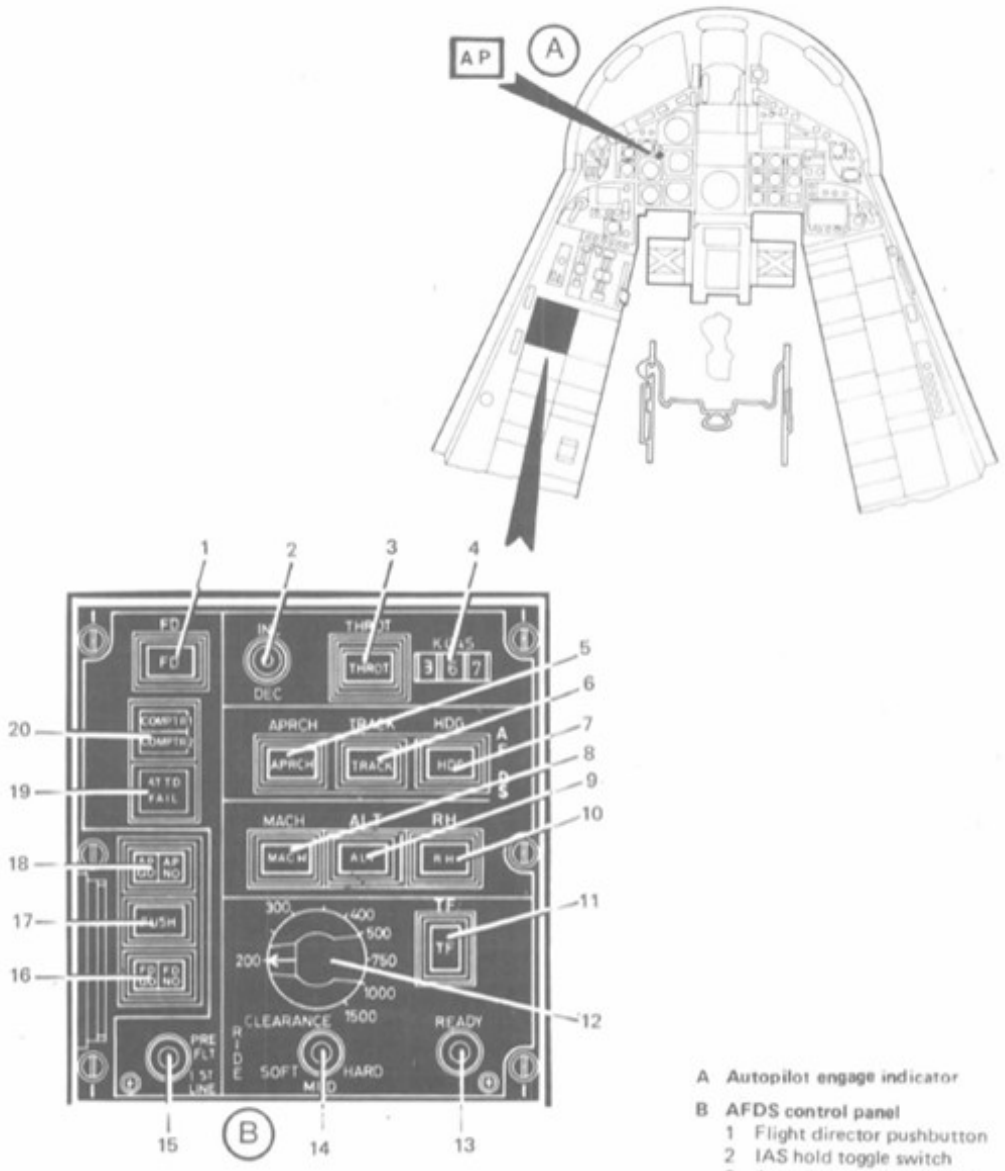

A Autopilot engage indicator

B AFDS control panel

1 Flight director pushbutton
2 IAS hold toggle switch
3 Autothrottle pushbutton
4 Datum speed display
5 Approach pushbutton
6 Track aquire pushbutton
7 Heading aquire pusbutton
8 Mach hold pushbutton
9 Altitude hold pushbutton
10 Radar height hold pushbutton
11 Terrain following pushbutton
12 Clearance height rotary switch
13 T.F. radar ready lamp
14 T.F. ride selection switch
15 Preflight/first line switch
16 FD status indicator
17 Self test activating pushbutton
18 Autopilot status indicator
19 Attitude fail indicator
20 Computer bite indicator

BASIC MODES

This mode is the basic mode of the AP which is operative if the engage/disengage button on the control stick is selected with no (excluding FD or THROT) preselections on the the AFDS control panel. At the moment of AP engagement, the attitude and heading information from the IN/SAHR is frozen in the AFDS computer store to provide an attitude/heading datum. Deviation from the datum generates error signals as pitch and roll demands which are fed as pitch and roll demands to the CSAS.

Attitude Hold

If the bank angle exceeds ± 7 degrees at the time of AP engagement pitch attitude and bank angle will be maintained. If pitch or bank exceed ± 60 degrees the aircraft is automatically restored to, and held at, the upper limit.

Heading Hold

If the bank angle at engagement is less than ± 7 degrees, the wings will be levelled and the AP will maintain pitch attitude and heading within an accuracy of ± 0.5 degree. A new datum for attitude/heading can be achieved by disengaging AP, applying manual correction and reengaging.

NOTE for Microsoft Flight Simulator:

In this Flight Simulator rendition, in order to grant compatibility with custom code and normal controls, the basic modes are not implemented – activating the autopilot with no preselection will only generate a wing leveling signal.

CRUISE MODES

Heading Acquire

This mode enables the aircraft to acquire and automatically hold the preset heading datum on the HSI. True heading information from the IN or SAHR/Doppler is fed to the HIS for display. When the HDG push button/indicator on the AFDS control panel is pressed, selection is confirmed when the indicator illuminates. When the AP is engaged, it automatically turns the aircraft on to the heading set on the HSI heading index marker control, subject to a maximum bank angle of 35°, and will maintain this heading to within ± 1/2 degree. With FD only engaged, the pilot can achieve the desired heading manually. Heading changes may be made with the mode in operation, by rotation of the HSI heading index marker control. This generates a heading error signal which is fed to the AFDS to produce control demands to the CSAS. Manual deselection is accomplished by pressing the illuminated HDG push button/indicator and deselection is confirmed when the light extinguishes.

Track Acquire

In this mode the aircraft acquires and maintains the track defined by the main computer. When the TRACK push button/indicator on the AFDS control panel is pressed, it illuminates to confirm selection. When the AP is engaged, the aircraft will automatically acquire and maintain the track determined by the MC. At the same time the TRACK HOLD indicator on the WAMS panel (rear cockpit) will illuminate to indicate to the navigator that the AP is engaged in the TRACK acquire mode and that hand controller corrections inserted during fixing or attack will control the aircraft track. In the navigation phase the track is acquired using the maximum turn rate compatible with the bank angle limits (60 degrees).
The MC datum track will be held to within ± 200 feet, while in the direct steer phase (within 20 NM) the maximum track error is reduced to ± 25 feet. With I'D engaged the pilot can monitor the AP performance during maneuvers. When FD only is engaged, it enables the pilot to hold the MC track manually, subject to the bank angle limits (60 degrees). During the attack phase, the pilot can perform manual attack maneuver using information displayed on the HUD. Manual deselection is accomplished by pressing the illuminated TRACK push button/indicator and deselection is confirmed when the light extinguishes.

Altitude Hold (Barometric)

The altitude hold mode enables the aircraft to automatically maintain a constant barometric altitude. Altitude and airspeed data are continuously supplied from ADC and the CSAS/TTU altitude/airspeed monitor, to the AFDS computers. The pilot flies the aircraft to the desired altitude, using baro height information displayed on the HUD and servo-pneumatic altimeter, the ALT push button/indicator is pressed and will illuminate to confirm engagement. The barometric height existing at the time of AP engagement becomes the datum height and deviations from this will generate error signal which is fed to the CSAS as a pitch control demand. The datum altitude will be maintained to within 100 feet or ± 0,5%, whichever is the greater. If ND is engaged together with the AP in this mode, the FD provides monitoring information to the pilot about AP performance.

Manual disengagement is made by pressing the illuminated ALT push button/indicator and deselection is confirmed when the light extinguishes.

Mach Hold

This mode enables the aircraft to maintain a given Mach number using information displayed on the HUD and CSI. The selected Mach number is maintained through changes in the rate of climb and descent by pitch compensation, when the desired Mach number has been attained, the MACH push button is pressed and will illuminate confirming selection. When the AP is engaged it will maintain the Mach number existing at the time of AP engagement with an accuracy of ± 0,005 Mach. With FD engaged the pilot is able to monitor AP performance. With FD only engaged, it enables the pilot to maintain the desired Mach number manually. Manual deselection is achieved by pressing the illuminated MACH push button indicator and deselection is confirmed when the light is extinguished.

Auto Throttle

The auto throttle mode enables the aircraft to maintain a calibrated (KCAS) datum- airspeed through the use of automatic throttle control. A KCAS signal from the ADC is supplied continuously to the digital indicator (datum speed display) on the AFDS control panel, the HUD display, and the AIDS computers. Prior to auto throttle selection the aircraft is flown to the desired KCAS and
the THROT push button/indicator is pressed. Selection is confirmed when the push button illuminates.
The auto throttle actuator is installed in the throttle box assembly and responds to commands from the AP system via AFDC2.
The KCAS value displayed at the time of engagement becomes the datum and the throttle electromagnetic clutch engages. Deviations from this datum generate an error signal which drives the throttle actuator to adjust the throttles. The datum speed will be held to an accuracy of ± 1%. Adjustment of the datum speed may be made by operating the INC/DEC switch, which has a range of ± 30 knots.
Auto throttle operates in the dry power range only and is independent of the AP engage/disengage button.
The auto throttle facility disengages automatically when the lower limit (IDLE) or the upper limit (MAX DRY) is reached. (Post mod. 01464: automatic auto-throttle disengagement will illuminate the amber A THROT/CWP caption).
The mode can be deselected manually by pressing the illuminated THROT button, or by the ICO. The automatic throttle mechanism can be overridden manually.

LOW ALTITUDE MODES

Radar Height Hold

This mode enables the aircraft to be flown at an automatically maintained radar height. It is intended for operation over water. The altitude datum source is the radar altimeter which feeds a continuous signal to the AFDS computers. The pilot flies the aircraft to the desired altitude using the radar altitude indicator. When the RH push button/indicator is pressed, it will illuminate to confirm selection.
The radar height existing at the time of AP engagement becomes the datum height. Deviations from this datum generate an error signal which is fed to the CSAS as a pitch control demand. With AP engaged, this mode will hold the clearance height over the range 100 feet to 1500 feet, and at speeds from 300 KCAS to 0.95 Mach, with an accuracy of ± 25 feet. The climb/sink rate at engagement should not exceed 500 feet/min. The system will operate with up to ± 45 degrees angle of bank and will accommodate wave heights up to 10 feet. With FD engaged, the pilot can monitor the operation of this mode or use the FD for manual control as a reversionary mode. If a failure of the AP or radar altimeter occurs in this mode, the AP generates a pull-up signal to the CSAS, the amplitude and duration of the signal is dependent on the aircraft's attitude at the time of failure. A wings level signal is applied at the same time. These commands will be indicated in the HUD and a breakaway signal will appear in the form of a flashing cross.

Terrain Following

The terrain following (TF) mode provides the aircraft with an automatic low level flying capability. The TF radar scans the terrain ahead of the aircraft and monitors the returns above or below the preselected height threshold. This mode may be selected when the green TF READY light is illuminated and is selected in conjunction with the CLEARANCE height and RIDE switch settings as required. The CLEARANCE height rotary switch may be set from 200 feet to 1500 feet and this value, together with the RIDE setting (SOFT, MED or HARD), is transmitted to the TF computer (TFC). Request for TF mode is made by pressing the TF push button/indicator and confirmation of mode selection is indicated when the push button illuminates.
When the AP is engaged, it follows commands from the TFC, but pitch rate demands are limited to 2g by the AP which provides control at speeds between 350 KCAS and 1.1 Mach. The CLEARANCE height and RIDE settings may be altered by the pilot without disengaging the AP, if the 70% low height criterium is considered.
With FD also engaged, the pilot can monitor the operation of the AP.

It is possible to adopt manual control using FD displayed commands (HUD), as a revisionary mode. If a failure occurs in the TFC or AP, the AP generates a pull-up signal to the CSAS, the amplitude and duration of the signal is dependent on the aircraft attitude and airspeed at the time of failure. A wings level signal is applied at the same time. These commands will be indicated in the HUD, the breakaway signal appearing in the form of a flashing cross. The TF mode may be manually deselected by pressing the illuminated TF push button/Indicator and deselection is confirmed when the light extinguishes.

AUTOPILOT ENGAGEMENT/MANUAL DISENGAGEMENT

The AP will engage when the autopilot engage/disengage button on the control stick is pressed, provided that all pre-engagement conditions are met.

Engagement is confirmed when AP engaged indicator illuminates. Disengagement can be made by:

- Pressing the engage/disengage button again.
- Operation of the ICO.
- In all modes other than the basic mode(s), by SFCO operation.
    - In the basic mode(s), operation of the ASO will initiate temporary disengagement, the AP will re-engage in the basic mode(s).

AUTOMATIC STEERING OVERRIDE

The automatic steering override (ASO) facility enables the pilot to temporarily the AP for maneuvering purposes. ASO will operate in the basic modes(s) only. Through the application of a stick force exceeding 38.2 N in pitch or roll, the AP will automatically disengage. (Auto throttle is not affected). When the stick force is reduced to below the ASO threshold, the AP will automatically reengage in the basic mode(s). If ASO operates when FD and AP are selected together, the outputs to the HUD and ADI are occulted until ASO operation ceases. The ASO has not effect on the FD when the FD is operating alone in the steering mode (i.e. AP not, engaged), If, at the moment of an initial attempt to engage the AP, stick forces exceed the ASO threshold, engagement is prevented and any preselected modes are cancelled.

STICK FORCE CUT-OUT

Stick force cut-out (SFCO) operates in all modes other than the basic mode(s). When a stick force is applied exceeding 38 N in pitch or 29 N in roll, the SI:CO disengages the AP and deselects all modes (including auto throttle and FD). If the FD is operating independently (i.e., with no other modes selected), SFCO has no effect.
SFC0 disengagement of the AP illuminates the red caption AUTO P on the CWP. The caption will extinguish when the ICO is operated.

INSTINCTIVE CUT-OUT

The instinctive cut-out facility (ICO) enables the pilot to immediately disengage the AP, the FD system, and deselect all modes (includes the auto throttle system), by operating the ICO switch bar on the control stick. (This action also disengages the NWS).

PITOT-STATIC SYSTEM

The pitot-static system of the aircraft provides aerodynamic and environmental reference data for various subsystems. Individual intake opening serve as input sources for pitot and static pressure.The pitot intakes consist of:

P1 Pitot-static nose probe in front of the radome.

P2 Pitot probe located on the right side of the fuselage below the front cockpit.

P3 Pitot probe located on the left side of the fuselage below the front cockpit.

There are seven static pressure intake sources which are located as follows:

S1 Pitot-static inside the nose probe in front of the radome.

S2 interconnected compensated static.

S3 vents, three each on the right and.

S4 three each on the left side of the nose cone.

S5 on the right side of the fuselage.

S6 on the right side of the fuselage.

S7 on the left side of the fuselage.

The Air Data System comprises the ADC and TTU which convert pitot and static pressures into electrical signals used, together with AOA and temperature data, for control and display.

AOA PROBES

The left AOA probe supplies the ADC and the left AICS. The right AOA probe supplies the strip AOA indicator and the right AICS.

TEMPERATURE PROBES

T1 temperature probes at the rear of each engine air intake supply the associated engine control system with intake temperature data. A second probe in the left engine air intake supplies total temperature data to the ADC.

AIR DATA COMPUTER

The digital ADC, located in the forward equipment bay, computes various air data parameters from pitot (P1), static (Si), local AOA (left probe) and total temperature (left air intake) inputs.
Pitot and static pressures and electrical input signals are converted to a form compatible to the computer.
The ADC requires a barometric pressure reference to be enabled to compute baro-corrected altitude. This is provided by the MB SET- rotary control on the HUD control panel.
The ADC has continuous BITE circuits which monitor its performance. Should the ADC or any of its input sensors fail, the affected output and all dependent outputs are set to zero after a short time delay to cater for transients. Output signals not affected by a failure remain valid.
Reliable indication of speed, AOA and barometric altitude will still be available from the secondary pitot-static system. The altimeter in the front cockpit will automatically revert to the STBY mode.

TRIPLEX TRANDUCER UNIT

The TTU, located in the forward equipment bay, converts pressure from separate pitot and static sources into electrical signals representing indicated airspeed, altitude and Mach number. These signals supply the CSAS and engine control systems with analogue data, and also operate a number of airspeed, altitude and Mach switches. The TTU supplies data signals for the following:

- CSAS gain scheduling.
- Engine control system
- Airbrake control
- Air conditioning ejectors Landing gear audio alarm and flasher
- Configuration warning

CENTRAL WARNING PANEL

If the air computer fails, the amber caption ADC will illuminate on the CWP in the rear cockpit. Reliable indication of speed, AOA and barometric altitude will still be available from the secondary pitot-static system. The altimeter in the front cockpit will automatically revert to the STBY mode.

INSTRUMENTS

ACCELEROMETER

The accelerometer measures positive and negative acceleration g-loads imposing on the vertical aircraftaxis. A main pointer and two index tabs indicate the aircraft vertical acceleration against a dial, graduated from minus 4 g to plus 9 g in increments of 0,5 g. Instantaneous indication of g-loads is made by a self-contained mechanism assembly inside the indicator case. The main pointer moves in the direction of the g-load being applied; a negative and a positive index tab follow the main pointer to its maximum travel. The index tab remains at the maximum negative or positive g-load indication attained, whereas the main pointer drops back as soon as the g-load is reduced. The index tab can be reset back to the 1 g position by depressing the PUSH button, located on the indicator's face.

PITOT STATIC SYSTEM

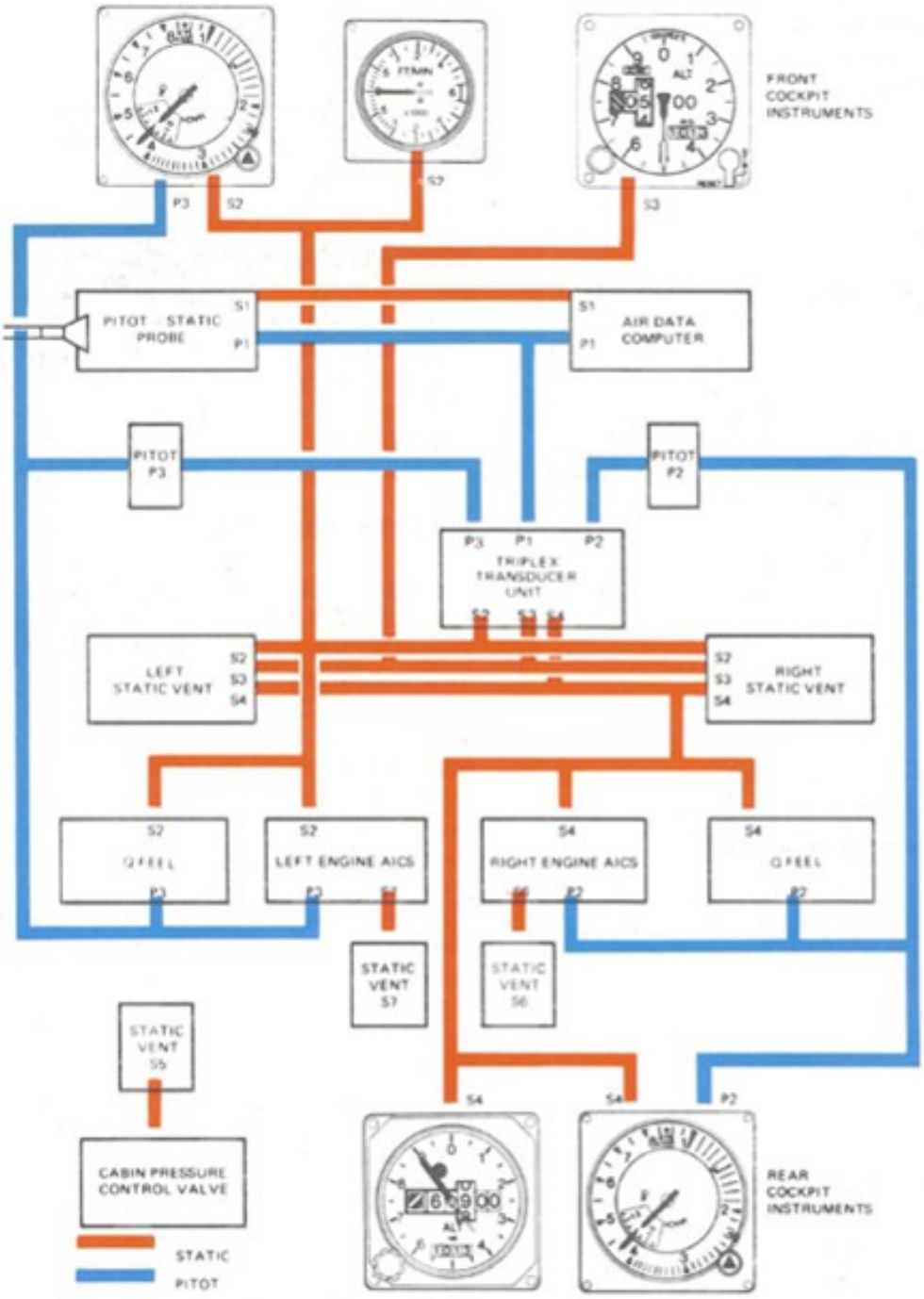

COMBINED SPEED INDICATOR (CSI)

The combined speed indicator provides a combined display of airspeed from 80 to 850 KTS and Mach number from 0,5 to 2,5 M. The airspeed index marker on the outer scale can be adjusted by the control knob on the instrument bezel.
The airspeed index marker on the outer scale can be adjusted by the control knob at bottom right of the instrument. The indicator in the front cockpit is supplied by the pitot pressure P3 and the static pressure S2. The indicator in the rear cockpit is supplied by the pitot pressure P2 and the static pressure S4.

SERVO-PNEUMATIC ALTIMETER

The altimeter is a servo-pneumatic instrument comprising a three drum counter indicating from — 2000 to + 80000 ft and a single needle indicating 1000 ft per revolution. At altitudes below 10000 ft, a black and white striped flag covers the left hand counter; at altitude below 0 ft this flag will be replaced by a black-and red striped flag. The altimeter operates in two different modes. Under normal condition altitude display is governed by the pneumatic input and a servo-repeater system inside the instrument, which is updated by input signal derived from ADC. In the event of power off or a difference between ADC and pneumatic input greater than 2000 feet or an ADC failure, the altimeter automatically reverts to the pneumatic standby mode. This status is indicated by STBY flag appearing in a dial cutout of the instrument. In STBY mode the altimeter operates with pneumatic pressure only, which is derived from the S3 static vents. Actuating the RESET knob on the altimeter bezel switches the instruments operating mode form STBU back to the servo mode or reverse. The RESET/STBY knob is spring-loaded to the center (neutral) position.
The servo system is powered by XP1 and PP1 provides the operating current for a vibration when in STBY mode.

NOTE

- Testing of the electrically operated servo mode of the altimeter is made with electrical power on. Adjust millibar counter to indicate 1013 and set FLT INST toggle switch on rapid take-off panel to FLIGHT position and IFU 1 toggle switch on the MC control panel to ON position. When pressing square TEST push button on the HSI mode panel the altimeter reading shall be 1250 feet. Pressing it again the test mode is deselected.
- The test button shall be operated only when the aircraft is on the ground, otherwise the altimeter may revert to STBY mode.

With the servo-pneumatic altimeter in STBY mode, large errors occur between HUD and HDD attitude indications.

PRESSURE-SENSITIVE ALTIMETER

The altimeter in the rear cockpit is a display comprising a three-drum counter indicating from - 2000 ft to 99000 ft and a single needle indicating 1000 ft per revolution. The left counter is covered by a black-and-white striped flag at altitudes below 10000 ft and by a black-and-red flag at altitude below 0 ft. The altimeter incorporates a vibrator, which reduces mechanical friction of gear trains and linkages of the mechanical assembly. If vibrator fails, and black-and-yellow flag appears above the counter. A barometric setting knob is located on the instrument bezel to make barometric settings on the millibar counter of the altimeter.

MAGNETIC STANDBY COMPASS

A conventional magnetic standby compass is installed in the front cockpit.

VERTICAL SPEED INDICATOR (VSI)

The vertical speed indicator located in the front cockpit, is a standard pneumatic instrument with a range of ± 6000 feet/minute.

ANGLE OF ATTACK (AOA) INDICATOR

The AOA indicator is electrically connected to the right AOA probe. Signals form the detector drive a servo-mechanism inside the instrument case. Display is made by a continuous indicating ribbon, moving against a vertical thermometer type scale graduated in units from 0 to + 30. In the event of an electrical or servomechanical failure a red-and-black etched warning bar will obscure the vertical dial.

ADC SCHEMATIC

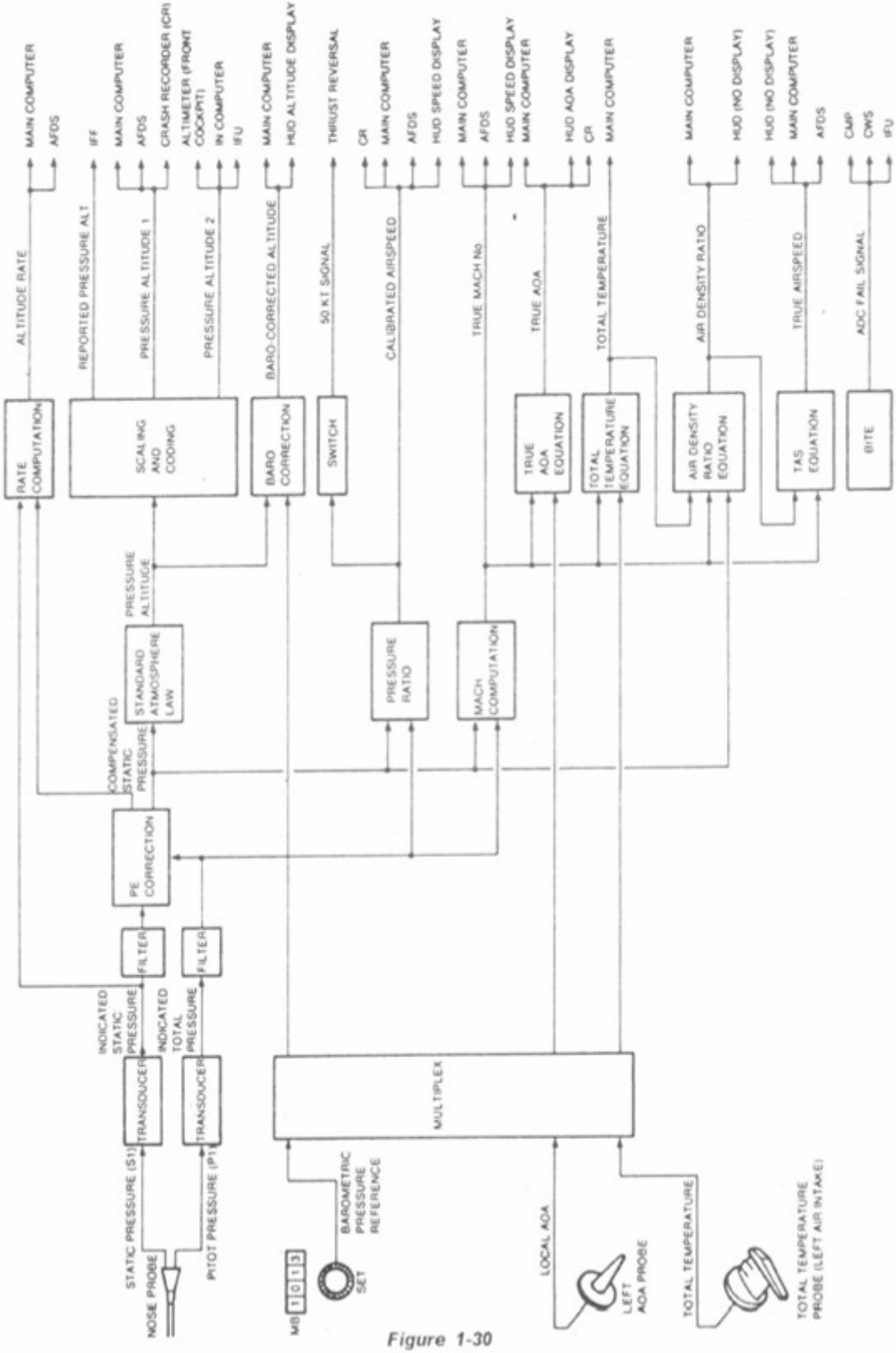

Figure 1-30

INSTRUMENTS

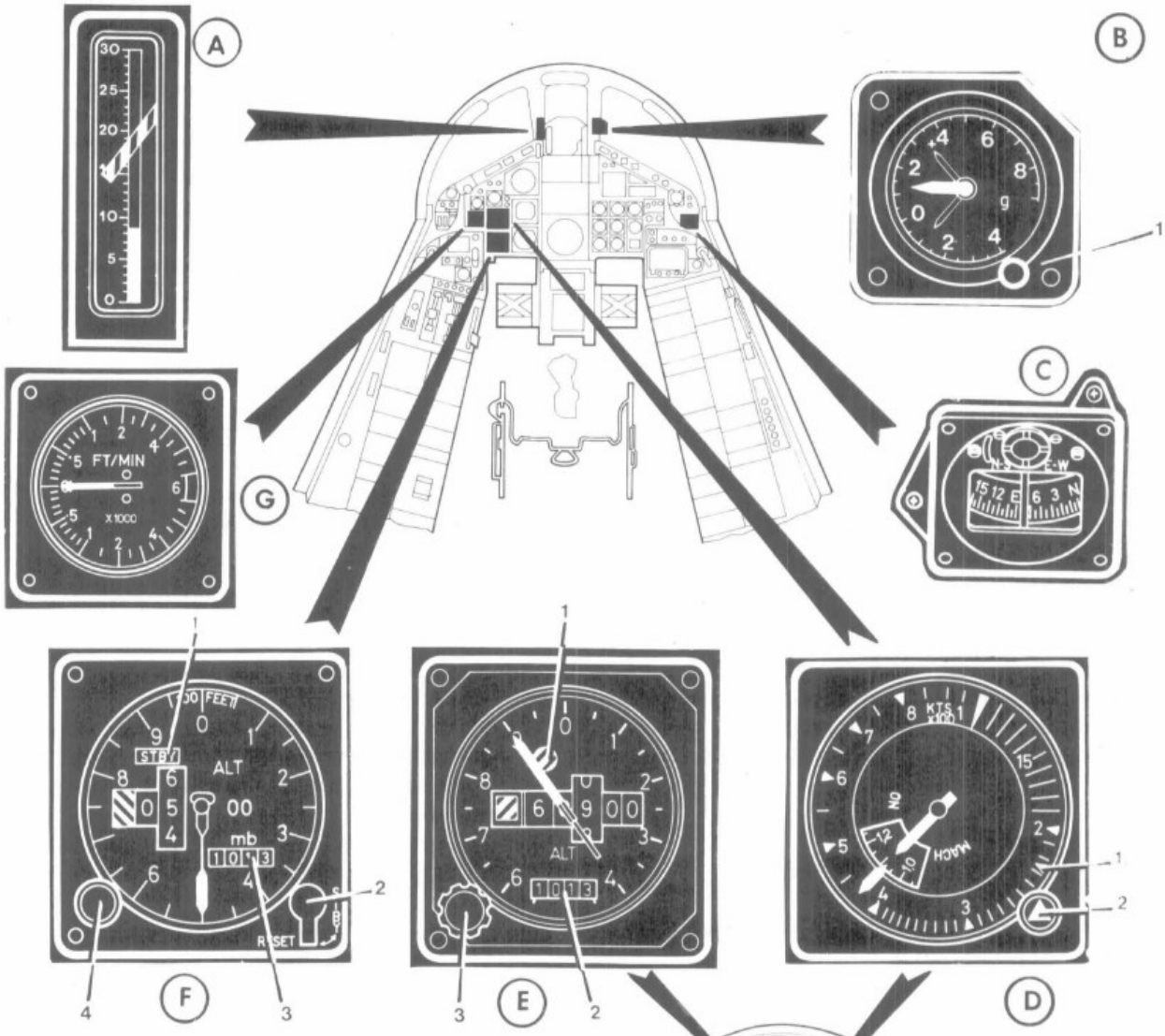

A **Angle Of Attack indicator**

B **Accelerometer**
- 1 Reset pushbutton

C **Magnetic stand by compass**

D **Combined speed indicator**
- 1 Airspeed index marker
- 2 Airspeed index marker control knob

E **Pressure sensitive altimeter**
- 1 Vibrator failure flag
- 2 Millibar counter
- 3 Barometric setting knob

F **Servo-pneumatic altimeter**
- 1 Stand-by flag
- 2 Reset knob
- 3 Millibar counter
- 4 Barometric setting knob

G **Vertical speed indicator**

HORIZONTAL SITUATION INDICATOR (HSI)

The HSI is a remotely indicating servo-instrument, displaying the aircraft's horizontal plan view depending on the mode selected on the HSI mode switch panel. The interface unit 1 (IFU 1) relays signal information from different input sources to the HSI. The IFU 1 is activated with the IFU toggle switch on the MC control panel. The two different operating modes which can be selected with the HSI mode switch panel are: NAV and TAC. Selected mode is indicated in the mode display window of the HSI instrument.

NOTE

The APP1, APP2 and DF setting on the HSI mode switch panel have no function.

In TAC mode, the relevant switches on the TACAN control panel shall be set to obtain indications of slant range and magnetic bearing on the HSI.
In the NAV mode, true heading, track and command track is derived from the IN and MC.

NOTE

For all modes except NAV, the appropriate switches on the SAHR control panel shall be selected.

NOTE for Microsoft Flight Simulator:

Given the limited functionality of the HSI on early Tornado IDS, in the simulator, the functionalities of the Mid-Life Update are implemented, and APP1 and APP2 are functional. Also, in order to grant compatibility with older sceneries that use VOR stations to emulate TACAN stations, TAC and APP modes will receive signals coming from VOR stations (by selecting the channel associated to the VOR frequency). In this way, ILS signals can be received (and processed by the flight director).

ATTITUDE DIRECTOR INDICATOR (ADI)

The ADI displays aircraft pitch and roll attitude, turn and slip and flight director demand.

Attitude Display

Pitch and roll attitude is displayed by the position of a spheroid relative to a fixed aircraft symbol. The spheroid is controlled by a vertical gyro and is divided by a white line representing the natural horizon into two sectors, grey (above horizon) and black (below horizon). A pitch scale on the spheroid is graduated above the below the horizon in 5° steps and is labelled at 30° and 60°. Zenith and nadir are represented respectively by a black and white spot. Roll angle is indicated by a pointer traversing a scale graduated in 10° steps to 30° steps to 90°. The dis-play has full freedom in roll but is limited to 85° in pitch.

NOTE

The fast erection knob shall only be pulled in straight and level flight.

The Attitude Director Indicator is mounted on the front cockpit main instrument panel which is fitted forward by 9 degrees towards the longitudinal fuselage datum line (LFD).
The ADI only compensates for 5 degrees and show ± 0 degrees when the LFD is 4 degrees above the horizon. Therefore, any ADI, mounted with a tilt angle in relation to the aircraft LFD, will show pitch error indications as a function of this tilt angle and the applied bank angle.
In conditions other than straight and level flight, the indicated pitch attitude on the ADI differs from actual aircraft pitch up to approximately minus 17 degrees at 180 degrees roll.

WARNING

AT LOW ALTITUDES, FAILURE TO CONSIDER INCREASES ACUTAL DIVE ANGLES RESULTING FORM THESE ADI ERRORS MAY PUT THE CREW INTO A CONDITION WHERE RECOVERY WILL NOT BE POSSIBLE.

Flight Director Display

The pitch and azimuth demand signals routed to the HUD from the AFDS are repeated on the ADI and are indicated by yellow pitch and azimuth demand pointer bars which operate at right angles to each other. In response to an FD demand, the pilot flies the aircraft so that the intersection of the two pointers coincides with the center of the aircraft symbol. When power is applied to the ADI and the AP/FD system is not engaged, the pointers are parked out of view. The attitude director indicator repeats primary pitch and azimuth demand signals from the auto-pilot to head-up display. Under electrical zero signal conditions, two

90° of set pointers, the pitch demand pointer, and the bank demand pointer intersect the center of the variable pitch datum. When responding to a demand the pilot has to center the variable pitch datum over the intersection of the two pointers.

INSTRUMENTS

Attitude director indicator

1 Horizon spheroid
2 Pitch scale
3 Aircraft symbol (variable pitch datum)
4 Power failure warning flag
5 Roll scale
6 Roll pointer
7 Rate of turn failure flag
8 Rate of turn scale
9 Slip indicator
10 Rate of turn pointer
11 Gyro erecting knob
12 Flight director warning flag
13 Pitch demand pointer
14 Horizon line
15 Intrument bezel
16 Lamp assy
17 Azimuth demand pointer

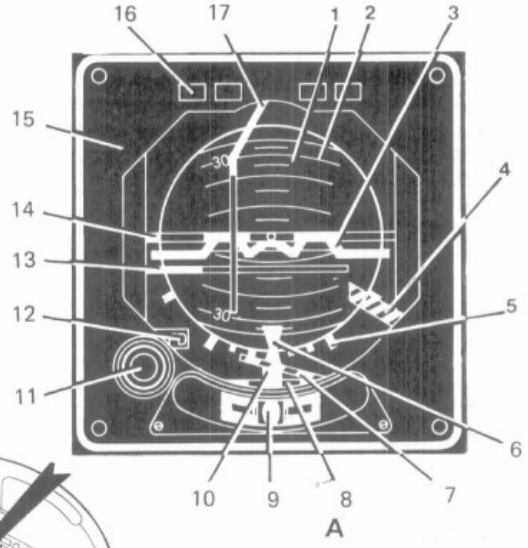

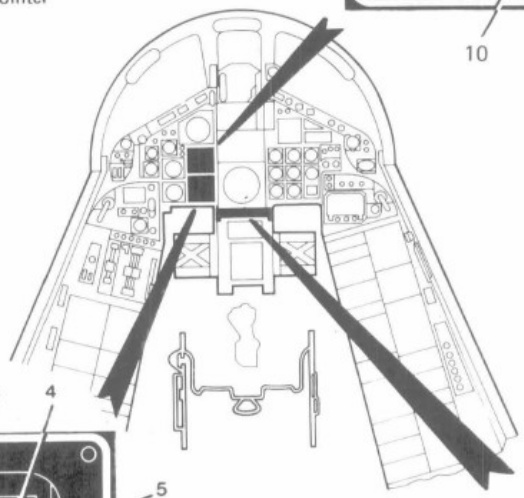

HSI mode switch panel

1 Mode selector switch
2 Test push button

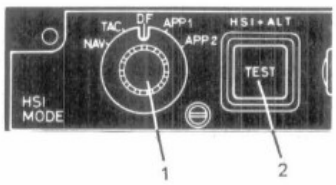

B

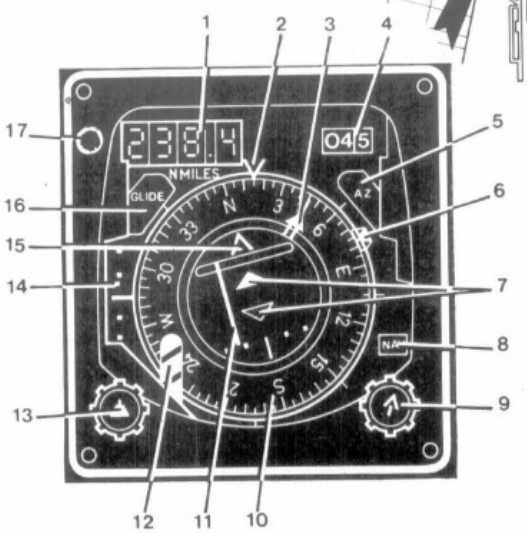

HORIZONTAL SITUATION INDICATOR

1 Range distance counter
2 Fixed lubber marker
3 Actual track pointer
4 Track bearing counter
5 Azimuth flag
6 Heading index marker
7 TO/FROM indicator
8 Mode display
9 Track select control knob
10 Compass card
11 Lateral deviation bar and scale
12 Display failure flag
13 Heading index marker control knob
14 Elevation deviation bar and scale
15 Track bearing pointer
16 Elevation failure flag
17 Range counter brilliance control knob

HSI DISPLAY

MODE SETT-ING	RANGE/ DISTANCE COUNTER	LUBBER MARKER COMPASS CARD	DEMANDED TRACK/ BEARING COUNTER	HEADING INDEX MARKER	AZIMUTH FLAG	DEMANDED TRACK/ BEARING POINTER	TO/FROM INDICATOR	MODE DISPLAY
	N MILES	N 3	045		AZ			NAV
NAV	Indicates range /distance to next waypoint in NM. Used in conjunction with to/from indicator.	Indicates true heading on compass card.	Displays demanded track to selected waypoint in digital format.	Setting reference for manually selected heading. Provides output data to AFDS with FD or AP in heading acquire mode.	Azimuth signal invalid.	Indicates demanded track to selected waypoint. Direct steer within 20 NM.	Indicates whether aircraft is flying to or from the selected waypoint. Used in conjunction with range counter.	Displays selected mode. NAV
TAC	Indicates slant range to selected TACAN station.	Indicates magnetic heading on the compass card.	Displays magnetic bearing to selected TACAN station in digital format.		Out of view.	Indicates magnetic bearing to selected TACAN station.	Out of view.	Displays selected mode. TAC
APP 1	TACAN slant range		Displays selected approach course		Azimuth signal validity	Indicates selected approach course		Displays selected mode. APP 1
APP 2	DME/P slant range							Displays selected mode. APP 2
DF	Not operative							

MODE SETT-ING	TRACK SELECT CONTROL	LATERAL DEVIATION BAR AND SCALE	HEADING INDEX MARKER CONTROL	DISPLAY FAILURE FLAG	ELEVATION DEVIATION BAR AND SCALE	ACTUAL TRACK POINTER	ELEVATION FAILURE FLAG	RANGE COUNTER DIMMER
					30	3 6	GLIDE	
NAV	Disengaged.	Indicates cross track error (distance) between demanded and commanded track. The spacing between the dots represents a displacement of 2000 ft.	Manual Control to set Heading Index Marker.	Signals from IFU 1, ENMC–P, LINS or HSI are invalid.	Centered.	Displays the actual track of the aircraft.	Out of view.	Dims 4-digit 7-segment distance counter
TAC	Disengaged.	Centered.		Signals from TACAN/ENSAHR IFU 1 or HSI are invalid.	Centered.	Centered.	Out of view.	
APP 1	Manual control to set the approach course	Indicates deviation from the selected approach path (Azimuth) *		Signals from TACAN and IFU 1 are invalid.	Indicates deviations from the selected approach path (Glide) * *	Indicates bearing to TACAN ground station	Elevation signal validity	
APP 2				Signals from DME/P and IFU 1 are invalid.		Indicates bearing to DME/P ground station		
DF	Not operative							

Rate of turn

Rate of turn is presented by the rate of turn pointer, which travels in linear movement over the rate of turn scale. The pointer responds to signals from a remotely located rate gyro installed in the forward equipment bay. The scale has two graduation left and right from center to indicate rate 2 (6 deg/sec) at full scale deflection.

Power Supply

The ADI gyro system is energized by setting the FLT INST toggle switch on the rapid take-off panel to FLIGHT position and 28 V DC power from DC busbar PP3 is supplied to the gyro unit in the instrument. At the same time 115 V AC power from AC busbar XP1 is supplied to the remote rate gyro unit. The ADI is illuminated integrally by 5 V AC power from the aircraft internal lighting system and controlled through a dimmer switch on the internal lights control panel in the front cockpit.

Rear Cockpit Artificial Horizon

The artificial horizon pitch and roll attitude and roll angle display is identical to that of the ADI with the exception of an additional graduation on the roll angle scale at 180°. The instrument spheroid is controlled by an integral vertical gyro supplied direct from the No. 2 AC busbar. In the event of loss of power to the gyro, an orange OFF flag appears at the bottom right of the display. A button at the bottom right of the instrument can be pressed to erect the gyro rapidly after starting if required, or in the air if the gyro has toppled.

NOTE

The fast erection button shall not be used within 40 seconds of the application of power and shall not be pressed continuously for longer than 60 seconds.

The artificial horizon has full freedom in roll but is limited in pitch to 80° (climb) and 82° (dive).

CANOPY

The canopy consists of two acrylic transparencies, joined by a strap to form a single assembly. It is bolted to the left and right edge members and front and rear arches. The canopy is hinged aft and opens to an angle of 35 degrees. Normal canopy operation is accomplished electro-hydraulically.
A hydraulic jack behind the rear pressure bulkhead opens and closes the canopy via a torque tube and linkage. The jack is supplied from the left hydraulic utilities system through a selector valve. A hydraulic accumulator, when fully pressurized, provides sufficient pressure for three canopy operating cycles when system pressure is not available: The nominal canopy accumulator nitrogen charge pressure is 105 bar.

NOTE

Canopy accumulator pressure should indicate 150 bar minimum. If pressure is below this value it may be achieved by use of the hydraulic hand pump.

If normal canopy opening on the ground is inhibited, it may be operated alternatively by:

- disengaging it from the normal operating mechanism by use of the jack release handle and raising it manually.

NOTE

Because of the weight of the canopy (110 kg) difficulty will be experienced in manually raising and holding it open.

- fracturing and blowing it clear by actuating the MDC.
- jettisoning the canopy by operating the canopy jettison handle.

Canopy and Windscreen Sealing

A continuous inflatable rubber seal is fitted along the canopy edge members and arches to seal between the canopy and the aircraft structure. As the windscreen can be hinged forward for servicing a separate seal is fitted to the windscreen to seal between the windscreen and aircraft structure. Via a lever on the torque tube behind the pilot's seat an inflation/deflation valve will be operated by locking and unlocking the canopy. The deflation/inflation valve controls a supply of air from the environmental control system to the seals. The air supply also charges an air reservoir to supply pressure for seal inflation while the aircraft is on ground with the engines shut down.

CANOPY SYSTEM CONTROLS AND INDICATORS

Internal Canopy Operating Handle

The internal canopy operating handle marked CANOPY - LOCKED/ UNLOCKED - LOWER/RAISE, is located on the right-hand side of each cockpit.
The handles are mechanically interconnected, and either may be used to unlock or lock, and to raise or lower the canopy. Selecting the handle to UNLOCKED/RAISE position unlocks the hooks, withdraws the shoot bolts, deflates the seals and raises the canopy fully. The canopy operating handle remains at RAISE, when released in that position. Pushing the handle fully forward before selecting RAISE will ensure the canopy unlocks cleanly. If required, the canopy may be left in any position by moving the handle to a position between RAISE and LOWER when the required canopy position is reached.
To lower and lock the canopy, the operating handle has to be selected to LOWER and hold in this position. The canopy commences to lower and simultaneously the warning horn will sound. When canopy is fully lowered, the warning horn stops. The baulking device, fitted to the left hook, will be pivoted clear, allowing canopy LOCKED to be selected.
If required, the canopy can be left in any intermediate position by releasing the handle.

External Canopy Operating Handle

The external canopy operating handle is located on the left hand side of the fuselage and accessible by a hinged flap.
Pushing in the flap above the external handle and pulling the handle fully causes the canopy to unlock and raise. After canopy is raised, the handle can be stowed by pushing in to fit flush with the fuselage. To lower and lock the canopy push in the flap above the external handle and pull out the handle until a stop is felt. Carry out a 15 degrees rotation in counterclockwise direction and push in handle slowly. The first 10 mm of travel will lower the canopy. After canopy is fully lowered push handle in to within 20 mm of the fuselage skin to lock the canopy. Rotate the handle in clockwise direction to align with the fuselage cutout and push in until flush with the fuselage skin.

Internal Jack Release Handle

If the normal canopy actuating mechanism fails with the canopy fully closed, the canopy can be disengaged from the mechanism by operating the internal jack release handle, marked JACK RELEASE, on the left hand side of each cockpit. The canopy can be raised manually after it has been unlocked by the internal canopy operating handle.

External Jack Release Handle

The canopy can be disconnected from the normal canopy mechanism by pushing in the flap above the external canopy operating handle, pulling out the handle fully to get access to the external jack release handle and pulling out the handle.

NOTE

Because of the weight of the canopy (110 kg) difficulty will be experienced in manually raising and holding it open.

Internal Canopy Jettison Handle

By pulling the internal canopy jettison handle marked CANOPY JETTISON, on the left side of each cockpit or any ejection seat handle the canopy will be jettisoned.

Central Warning Panel

A red CABIN caption on the central warning panel, operated by the left forward shoot bolt, illuminates if either cabin altitude exceeds 26.000 feet or the canopy is unlocked.

CANOPY JETTISON OPERATION

The system consists of a canopy jettison initiator unit, two unlocking jacks situated behind the pilot's seat, a canopy jack piston unit behind the rear pressure bulkhead, and two canopy jettison rocket motors, mounted to the front end of each canopy edge member. Two cartridges are fitted in the jettison initiator unit, one is fitted in each unlocking jack, and one in each rocket motor.
A safety pin is fitted to the canopy jettison-initiator unit to make the aircraft safe for parking.
The cartridges in the initiator unit are fired via cables, when the jettison handles are pulled, or by a piston operated by gases generated from the firing of the ejection seat cartridges.

CANOPY

1 Internal canopy operating handle
2 Internal jack release handle
3 Internal canopy jettison handle
4 External canopy operating handle
5 External jack release handle
6 External MDC initiator

Gases from the initiator unit are simultaneously piped to the canopy unlocking jacks and the canopy jack piston unit. The gases cause the firing of the cartridges in the unlocking jacks, which unlock the canopy and initiate rocket motor ignition. The jack piston unit acts on the canopy jack release to free the canopy from the normal actuating mechanism.
The rocket motors force the canopy upwards until fractures occur at the hinges and the operating torque tube levers, allowing the canopy to separate from aircraft.

CANOPY MICRO DETONATING CORDS (MDC) SYSTEM

The MDC system is designed to fracture and blow clear the two parts of the canopy, thus facilitating ground rescue operations or emergency ground egress.
The system also provides a back-up facility should the canopy fail to jettison (e.g., during an ejection sequence). The system incorporates detonating cords bonded to the canopy and on initiation will fracture the canopy transparency and blow the pieces clear. For detailed information on MDCs, see Ejection Seats.

MDC INITIATOR CONTROLS

Internal MDC Firing Handle

An internal MDC firing handle, in a black and yellow striped housing, labelled MDC, is fitted to the left canopy rail in each cockpit. Each handle is stowed and held in the bottom of the housing by a springloaded release catch. When the catch is moved rearwards, the handle is released and pivots down. It can then be pushed forward to fire the MDC. The internal MDC firing handles, the ejector seats, and the MDC external firing handle are connected by levers and cables to the MDC initiators. Normally, on ejection, the canopy will be jettisoned immediately complete with the MDC firing mechanisms, therefore the MDCs do not detonate. However, if the canopy fails to jettison, the relevant portion of the transparency will be blown clear as each seat rises approx. 12 mm (i.e., with the command ejection selection lever in REAR, rear set movement fires only the rear transparency. The front transparency will remain in place).

NOTE

When the aircraft is on the ground with the canopy raised, both MDCs will be fired simultaneously by operating either internal MDC firing handle.

External MDC Firing Handle

An external black and yellow striped MDC firing handle is received into the left forward fuselage skin and is protected by a frangible transparent panel. When the handle is broken out and extracted, it will extend on 3 m of cable, thus allowing the operator to be clear of the canopy when the MDCs denotates.

NOTE

With the canopy raised, the MDCs cannot be fired by operating the external MDC firing handle.

EJECTION SEATS

The aircraft is equipped with two Martin Baker Mk. 10 ejection seats, which provide the crew with a safe escape from the aircraft under most combinations of aircraft altitude, speed, attitude, and flight path. The seats are propelled from the aircraft by cartridge operated ejection guns on the back of the seats assisted by rocket motors on the bottom of the seats. Ejection can safely be accomplished from zero altitude to 50.000 feet and 0 to 625 knots (IAF) or Mach 2, whichever is the lowest. Operation of the ejection seat begins with actuation of the seat pan firing handle which causes the canopy to jettison and the ejection gun to fire.

NOTE

Canopy jettison malfunctions will not interfere with the seat firing sequence.

Should the canopy fail to jettison during ejection, the Micro Denotating Cord (MDC) system will fracture, and blow clear the two parts of the canopy transparency.
After ejection the seat is stabilized, and the forward speeds is reduced by a duplex drogue system. After automatic seat separation the personal parachute is deployed automatically.
Protection during ejection is provided by incorporation of leg restraint and arm-restraint system, and head location in a shaped headrest.

Safety Features

WARNING

THE ESCAPE SYSTEM IS A POTENTIAL SOURCE OF DANGER AND INADVERTENT OPERATION MAY CAUSE FATAL INJURIES. SAFETY PINS ARE FITTED TO SECURE THE SYSTEM AND ON

COMPLETION OF A FLIGHT THE CREW SHALL ENSURE THAT THE AIRCRAFT IN THE SAFE FOR PARKING' CONDITION

Safety pins are provided in the escape system to prevent inadvertent initiation. Pins are fitted to:

- MDC initiator unit
- Seat pan firing handle
- Canopy jettison initiator unit (front cockpit only)

In the front cockpit the safety pins will be inserted in stowages marked MDC, SEAT and CANOPY on the right side of the cockpit during flight, and in the rear cockpit respectively, MDC, SEAT.

CANOPY JETTISON AND MDC

The cartridges in the canopy jettison initiator are fired during ejection by the gases generated from the ejector seat cartridges. Alternatively, the jettison initiator will be activated when a jettison handle is pulled by the pilot or navigator. The MDC system is designed to fracture and blow clear the two parts of the canopy, thus facilitating ground rescue operations, or ground emergency evacuation (emergency ground egress). The system also provides a back-up facility should the canopy fail to jettison during and ejection sequence. The MDC is a detonating cord bonded to the periphery and fore and aft center lines of each part of the canopy. The cord is routed in such a way, on detonation, it fractures each section of the canopy into two and blows the pieces clear. Guards are fitted to minimize the amount of debris blown into the cockpit following detonation.

EJECTION SEAT CONTROLS

Seat Pan Firing Handle

The black and yellow striped seat pan firing handle is located in each cockpit on the front face of the seat pan. If pulled, ejection will be initiated. To prevent inadvertent operation, the handle can be secured by a safety pin.

Manual Separation Handle

The manual separation handle, on the right side of the seat pan, constitutes an alternative method of initiating seat/man separation and parachute deployment in the event of failure of the drogue gun and/or barometric time release unit. A thumb catch incorporated in the handle shall be depressed before the handle can be raised. The handle can be operated only after seat ejection.

WARNING

WITH ARM RESTRAINT ACTIVATED, THE MANUAL SEPARATION HANDLE MAY NOT BE REACHED IF THERE IS AN OBSTACLE (LIKE CLIP BOARD, FILLED POCKET) ON THE RIGHT TIGHT.

Pitch Control Unit

The pitch control unit, located behind the manual separation handle on the right side of the seat pan, is adjusted to the weight of the occupant in kg by setting a knurled knob. Rotating the knob adjusts the thrust angle of the seat rocket pack. The weight reading is displayed on an indicator drum visible through a window. The adjustment has range between 65 and 110 kg.
Post mod. 00996
The pitch control unit is deleted from the ejection seat.

Harness Go-Forward Lever

A two-position lever is situated in a slotted housing on the left side of the seat pan. For normal flight conditions the lever can be selected to the forward position which allows the harness to extend but restrains rapid forward movement (e.g., during a crash landing). With the lever in the rear position, the harness straps can retract but are prevented from extending.

Command Ejection Selection Lever

A two-position command ejection selection lever, labelled COMMAND EJECTION - BOTH/REAR, is located on the right console, rear cockpit.
With the lever selected to REAR, pulling the front seat pan handle initiates canopy jettison, and sequential ejection from both cockpits (i.e., rear first). If the rear seat pan handle is pulled, it will initiate canopy jettison, and ejection from the rear cockpit only. With the lever selected to BOTH, pulling the seat pan handle in either cockpit initiates canopy jettison, and sequential ejection from both cockpits (i.e. rear first). In order to move the lever, a sleeve shall be lifted. With the sleeve lifted the lever is spring-loaded to REAR.

Seat Lower/Raise Switch

A three-position toggle switch, marked SEAT LOWER/RAISE, spring-loaded to the center OFF position, is located on the right console of each cockpit. In the rear cockpit the seat raise/lower switch is located on the lamps test panel. The switch controls the seat adjustment actuator which provides vertical adjustment of the seat pan in relation to the seat beams.

SEAT SUB-ASSEMBLIES

Ejection Gun

The ejection gun provides the initial power for seat ejection by means of one primary cartridge, percussion fired by the breech time-delay firing unit and two secondary cartridges, fired by pressure and heat from the primary cartridge.
The ejection gun time-delay firing unit for the front seat has a nominal delay of 0.75 sec. ± 0.05 and for the rear seat 0.35 sec. ± 0.05. The differing delays together with the asymmetric rocket motor arrangements ensure that the seats follow divergent trajectories and will not collide during ejection.

Drogue Gun

The drogue gun is mounted on the upper left side of the main beam of the seat and is fired by a trip rod, connected to the ejection gun cross beam. The unit is triggered by seat ejection and fires a drogue piston to deploy a 22-inch diameter controller drogue 0.5 sec. ± 0.1 after ejection. The controller drogue in turn deploys the 5 feet diameter main drogue.
The gun consists of a time delay mechanism, a primary firing pin, a gas-operated firing pin, a barrel, two cartridges, and a piston connected to the drogue withdrawal line. The gas systems of the time release and manual override are connected to the gas-operated firing pin.

Rocket Motor

The thrust of the ejection gun will be sustained by the rocket motor, located under the seat pan, and is ignited as the seat leaves the aircraft. A static line, incorporated in a remote rocket firing unit mounted outboard of the left main beam below the drogue gun, is anchored to the trip rod of that unit. As the seat leaves the aircraft the static line operates the firing unit.

Pitch Control Unit

To cater for variations in seat/man combination center of gravity, the thrust angle of the rocket motor is adjusted through the pitch control unit.
Post mod. 00996 (Post OT 645)
Due to deletion of the pitch control unit, the thrust angle of the rocket motor is fixed.

Barostatic Time-Release Unit

The ejection seat is fitted with a barostatic time-release unit, located outboard of the starboard main beam, and provides the automatic release of the drogue assembly, deployment of the parachute, and seat/man separation after ejection.
A 1.5 sec. ± 0.1 time-delay mechanism is incorporated to delay the development of the parachute until the drogues have stabilized and decelerated the seat. For high altitude ejections a barostat assembly functions in conjunction with the delay mechanism to prevent operation of the time-release mechanism until seat and occupant have descended to an altitude of approximately 15.000 ft. Subject to the influence of the g-stop mechanism at ejection below an altitude of 15.000 ft. the barostat system ensures immediate deployment of the main parachute and separation of the occupant from the seat.

G Stop Mechanism

An acceleration sensitive interdictor (g-stop) incorporating a secondary barostat is fitted to the seat. The g-stop functions in conjunction with the time-delay mechanism to limit parachute opening shock loads at high speeds within the medium altitude band, below primary barostat height, by delaying parachute deployment until the seat has decelerated to below a pre-set g value. Below 6000 feet the secondary barostat prevents operation of the g-stop.

PARACHUTE AND COMBINED HARNESS

The parachute and combined harness comprise:

- a personal parachute of 5.8 m diameter
- a drogue assembly
- a combined parachute and seat harness
- a back pad.

The personal 5.8 m parachute is packed into a rigid container, located on top of the seat beam and provides head location during ejection. The parachute is packed together with a 1.5 m (5 feet) main drogue, which is connected by a second strap to a 0.56 m (22 inch) controller drogue.
The combined harness assembly is an integral part of the parachute assembly and consists of two parachute lift webs, two adjustable shoulder straps, two adjustable thigh straps, and two leg loops.
The shoulder straps have two roller brackets through which are passed the webbing straps of the harness power retraction unit. The roller brackets form the upper harness attachment points. A cross-strap between the roller prevents the shoulder straps from slipping off the occupant's shoulder.
A back pad is attached to the harness and supported by three cross-straps, passing through beckets in the back pad. Two quick-release connectors, mounted on the strap each side of the central cross-strap, provide attachment points for the personal survival pack.

Harness Power Retraction Unit

The harness power retraction unit is fitted to the front face of the ejection seat main structure. The function of the cartridge operated unit is to ensure that, regardless of the occupant's position when ejection is initiated, the harness will be retracted and mechanically locked. The occupant will be held in the correct posture before the seat moves and g forces are supplied. During normal flight operations the harness go-forward lever can be selected to the forward position, which allows the harness to extend, but retrains forward movement in the event of harness withdrawal. The harness strap can retract, but they are prevented from extending when the harness go-forward lever is in the rear position.

Harness Release Mechanism

The harness release mechanism is a mechanical assembly, operated by gas pressure from the cartridge of the barostatic time-release unit. It comprises:

- an upper harness release.
- a lower harness release.
- an arm restraint system release.
- a leg restraint system release.

The upper harness locks are located on each end of the harness retraction unit. The straps of the harness retraction unit are passed through roller brackets on the parachute harness and lugs are locked into the top locks to provide shoulder restraint.
The lower harness release mechanism includes the two lower harness locks, the negative-g strap lock, the PLC man protection and leg restraint release mechanism and the guillotine to cut the arm restraints. The lower harness locks are located in the lower rear corner of the seat pan and house the lugs on the lower portion of the parachute harness,

Leg Restraint System

The leg restraint system is fitted to the ejection seat to draw back and restrain the occupant's legs close to the seat during ejection. The system consists of two leg restraint lines, two snubbing units, two taper plug assemblies, and four leg garters.
The lower end of each restraint line is attached to brackets in the aircraft floor by a fitting, incorporating a shear rivet. From the fitting each line is routed upwards through a snubbing unit fitted on the front face of the seat pan, forward through the D ring attached to the upper garter and then passed inboard to outboard the lower garter, and finally the end plug is fitted into the taper plug housing on the snubber unit.
Provision is made on each snubbing unit to allow the occupant to adjust the leg lines individually to give comfortable leg movement. The leg restraint line adjustment levers are located on the inboard face of each snubbing unit.

Arm Restraint System

To prevent injury to the arms due to flailing during ejection, an arm restraint system is fitted. The system consists of two restraint lines and two snubbing units each incorporating a gas-operated guillotine which cuts the arm restraint.
The guillotine is operated simultaneously with the harness release mechanism by gas pressure from the barostatic time-release unit cartridge. The upper ends of each line are connected to the nylon tapes on the crewmembers' arm by manual connectors. The lower ends pass through snubbing units, located inboard of each thigh support, on the front face of the seat pan. The snubbing units permit the lines to be drawn downward but prevent upward movement. A boss is provided on each unit to accept a tool for adjusting the restraint line length.

Negative-g Restraint System

The effects of negative-g forces upon the occupant are counteracted by the fitting of a negative-g restraint strap. The fixed strap, having a lug on the lower end, which engages in a lock in the seat pan center front

floor. At the upper end of the strap is a two-point quick-release fitting into which the lugs on the parachute harness shoulder straps are engaged.

Manual Separation System

In the event of a barostatic time-release failure, the manual separation system, fitted to the starboard side of the seat provides an alternative method of initiating the harness release system.
The system consists of a spade-type handle which is linked to the seat pan firing handle and shall not operated unless an ejection sequence has been initiated. The manual separation handle incorporates a locking device to prevent inadvertent operation, controlled by a button on the top of the handle.
The button shall be depressed before the handle can be raised.
Raising the handle causes the gases from the manual separation cartridge to actuate the same mechanisms as those actuated by the barostatic time-release unit in the automatic sequences. In order to cater for drogue gun failure, the gases from this cartridge are also used to fire the second cartridge in the drogue gun.

Personal Equipment Connector (PEC)

The personal equipment connector is mounted on the left hand side of the seat pan and enables the seat occupant to connect and disconnect his personal services to and from the aircraft supplies by a single action. On seat ejection all leads except the emergency oxygen are disconnected and automatically sealed off. Services supplied through the PEC are:

- Main oxygen supply
- Emergency oxygen supply
- MIC/TEL
- Anti-g suit supply (see Environmental Control System)

The PEC comprises three portions, an aircraft portion, a seat portion and a man portion. The man portion is attached to the flying clothing and released from the seat by operation or the harness release mechanism during ejection of by firmly pulling the PEC release lever. When all portions are connected all valves are opened. Should the aircraft main oxygen supply fail operation of the emergency oxygen manual control (ring grip) will activate the emergency oxygen system and select the 100% oxygen regulator.

Personal Survival Pack

The personal survival pack is a fiberglass container in which a life raft and survival aids are packed. The container is topped by a specially designed cushion, which gives support to the thighs during ejection. The pack is attached to the combined harness by a retaining strap, which passes over the raft and the seat cushion. The outer ends of the strap terminate in arrowhead connectors, which locate in quick-release connectors on the parachute harness. Pressing the thumb catches on one of the quick-release connectors allows the survival pack to be lowered on a lowering line and remain suspended approximately 15 feet below the ejectee.
The lowering line is connected by an arrowhead connector to a quick-release connector on the occupant's life preserver.
(Post mod. 01415: the PSP will be released automatically 4 seconds after seat-under separation by pyrotechnical mean).
The life raft is a single seater embodying an inflatable canopy and floor and is stowed in a zipped compartment of the fabric fiber glass container. The raft will automatically be inflated on immersion in water by means of a water-activated battery, which ignites a detonator. The gases from the detonator operate the head of a CO_2 cylinder and simultaneously withdraw the pack closure pin, allowing the life raft to emerge from the pack. The pack may be opened manually, and the life raft inflated by operating a handle secured to the closure flap on the underside of the pack. The handle is attached to a firing pin which discharges the CO_2 bottle.

EJECTION SEQUENCE SYSTEM

Ejection is initiated by pulling the seat pan firing handle. The sear will be withdrawn from the firing unit and the cartridge is fired. The gases are passed to the harness retraction unit cartridge, which fires to retract the harness. The canopy jettison is initiated and, if selected, ejection of the other seat is initiated. If the canopy fails to jettison, the MDCs will detonate, As the seat rises, the drogue gun time delay and the barostatic time-release unit are activated. The electrical connections to the seat are broken, the IFF system is activated in the emergency mode, a signal is routed to the crash recorder, the aircraft portion of the PEC is disconnected, the emergency oxygen supply is activated and the leg and arm restraint system operate. As the seat nears separation from the ejection gun, the rocket motor is fired to sustain the upward thrust of the ejection gun, and after the delay mechanism (0.5 sec. + 0.1) has operated, the drogue gun is fired to pull the withdrawal line, which removes the closure pin from the flaps at the drogue parachute pack and deploys the drogues. On removal of the barostatic time-release unit baulk and after the delay (1.5 sec. ± 0.1) has elapsed, the cartridge is fired to free the drogue shackle. The gases simultaneously operate the harness release system

freeing the occupant from the seat. The drogues withdraw the main parachute, which develops and lifts the occupant and survival pack from the seat.

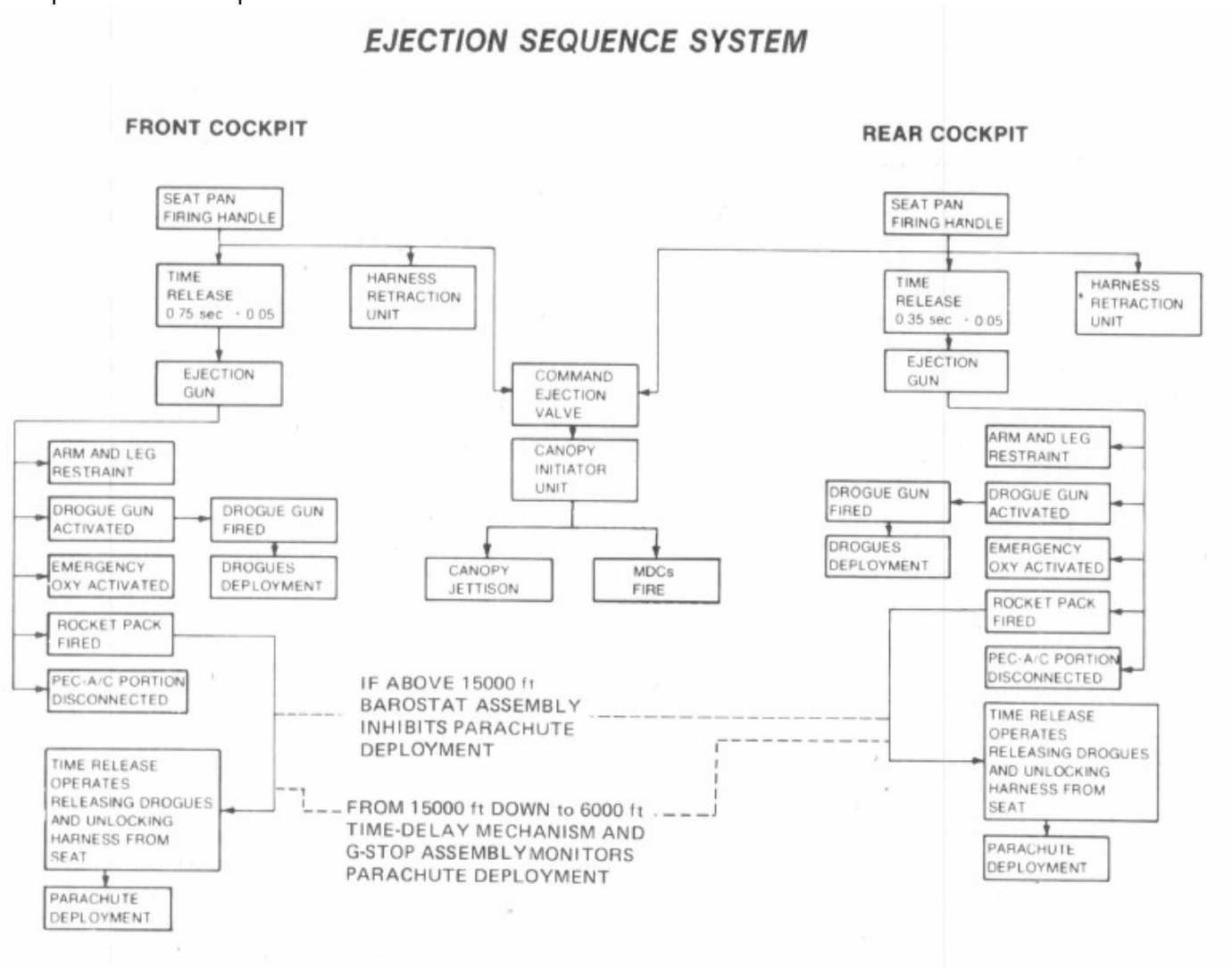

ENVIRONMENTAL CONTROL SYSTEM

The environmental control system provides air for:

- cockpits heating/cooling
- ventilating
- pressurizing
- windscreen and canopy seals inflating
- windscreen rain dispersal and windscreen wash
- windscreen de-icing
- windscreen and canopy de-misting
- forward, rear, spine, and radar equipment compartments, anti-g system and wing slot sealing cooling/pressurizing.

CABIN AIR CONDITIONING SYSTEM

A high pressure, high temperature air supply is bleed from the 4th stage of the high pressure compressor of each engine.
This bleed air is directed through non-return valves, and then, with the AIR SYSTEM MASTER switch on the environmental control panel in the ON position and one or both engines at or above 59% NH, the air system master valve opens to allow air to enter the system.
The air is then routed through a pressure reducing valve to a primary heat exchanger, which reduces the temperature. Air flow through the heat exchanger is controlled by a by-pass temperature control valve. The air is further cooled by a cold air unit and a secondary heat exchanger to the temperature selected by the

pilot. In the event of ice forming in the cold air unit outlet, a signal from a differential pressure switch causes the temperature control valve to temporarily increase the amount of air by-passing the cold air unit and secondary heat exchanger until the ice melts. Before the air enters the equipment compartments and the cockpits, water is extracted from the air. Below certain airspeeds, ejector, located in the cooling air outlet ducts of the heat exchangers, will induce adequate cooling air flow through the heat exchangers. The primary heat exchanger ejector will operate below 190 kt and that of the secondary below 170 kt. Overtemperature or overpressure conditions in the system result in closure of the air system master valve.

Cabin Air Distribution

The air is routed through the normally open cabin air shut-off valve controlled by the CABIN HEAT control knob on the environmental control panel to the cabin. The air is distributed through outlets and after embodiment of mod. 00924 to the headrest of each ejection seat.

Cabin Temperature Control

Cabin temperature is controlled automatically between 5 degrees C and 30 degrees C by setting the CABIN HEAT control knob within the AUTO range between COLD and HOT, thus operating the temperature control valve. Cabin temperature between 3 degrees C and 45 degrees C may be achieved by selecting the CABIN HEAT control knob in the MAN sector between COLD and 110T. Setting the CABIN HEAT control knob to OFF closes the cabin air shut-off valve, therefore the temperature control valve runs to the "fully cold" position (2 degrees C) to ensure that cold air is supplied only to the equipment compartments. In the event of ice forming in the cold air unit outlet, a signal from a differential pressure switch causes the temperature control valve to temporarily increase the amount of air by-passing the cold air unit and secondary heat exchanger until the ice melts. Overheat, underheat and ice protection are not provided when temperature is under manual control.

Equipment Cooling

With the engines running and the cabin air shut-off valve open, the front equipment compartment is cooled by air, discharged via the cabin pressure control valve. If the cabin air shut-off valve is closed, the air is routed to the front equipment compartment via the cabin by-pass shut-off valve. The rear and spine equipment compartments are cooled by air taken from downstream of the water separator.
The equipment compartments are cooled by cooling fans powered by XP1 which operate:

- with the AIR SYSTEM MASTER switch set to ON and both engines running at less than 60% NH.
- with the AIR SYSTEM MASTER switch to EMERG RAM AIR.

PRESSURIZATION SYSTEM

Cockpits, canopy and windscreen sealing, wing slot sealing, anti-g suits, and radar are pressurized by the pressurization system. Pressure in the cockpits is controlled by a cabin pressure control valve. When the aircraft is below 5000 feet, the valve automatically maintains an unpressurized condition in the cockpit. When the aircraft is above 5000 feet a differential pressure is maintained up to 40.000 feet. The differential pressure of 36:2 kPa (max) obtained at 40.000 feet is maintained constant at higher altitudes.
A cabin pressure control valve, functioning as a safety and inward relief valve, controls the cabin pressure at a nominal 40 kPa above ambient pressure. If ambient pressure exceeds cabin pressure the safety and inward relief valve opens to allow pressure compensation.

Emergency Ram Air

An emergency ram air scoop, controlled by the AIR SYSTEM MASTER switch in the EMERG RAM AIR position, will admit air into the crew compartments and avionic equipment bays in the event of loss of cooling and pressurization air.

Wing Slot Sealing

A slot is obtained on each side of the fuselage to accommodate the inner rear part of the wing when they are swept back. Aerodynamic scaling is assured by two pneumatic bags for each wing.
These bags are inflated with air pressure supplied through pressure reducing valve and automatically. controlled by shut-off valves. Each shut-off valve is controlled by a temperature sensor, which closes the valve in the event of too high air temperature (135 degrees C).

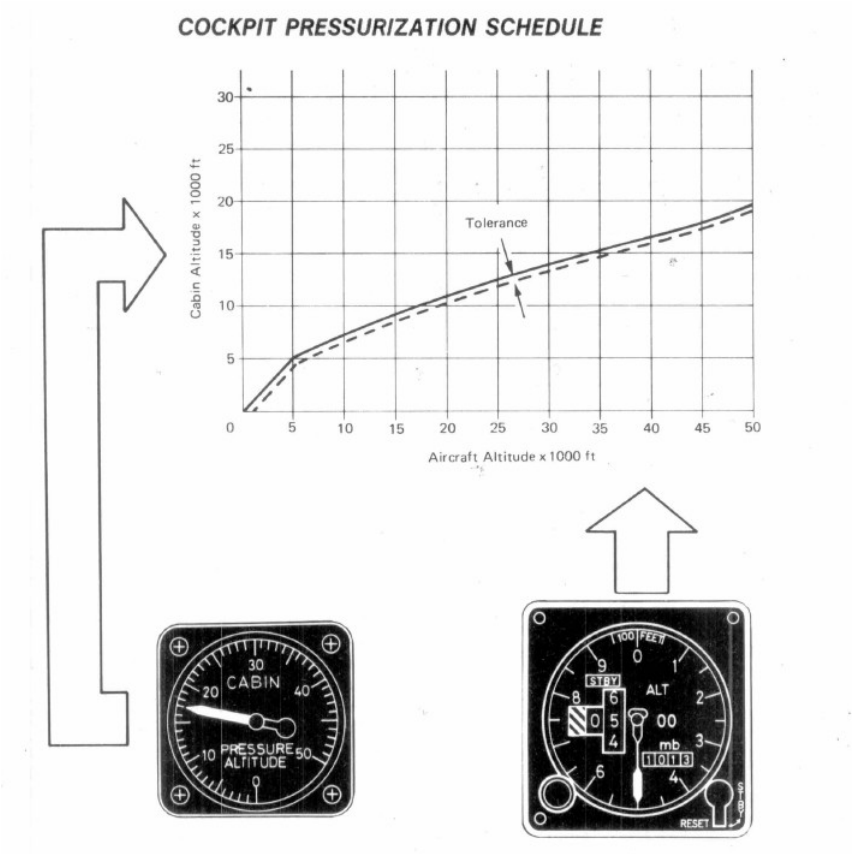

Anti-g Valves

The anti-g valves, one in each cockpit, control air delivery to the anti-g suits. Air is tapped from upstream of the cabin temperature valve, passed through an on/off valve, an anti-g valve, and delivered to the suit via a personal equipment connector (PEC). The on/off valve is pushed fully forward to on. Below 2 g no air passes to the suit: Above 2 g, the anti-g valve will control the suit pressure to a maximum pressure of 82.5 kPa.
A rubber capped test button on the anti-g valve is used to test the serviceability of the valve.

Radar Pressurization

The nose radar pack is pressurized by air, tapped from the rain dispersal supply. The system incorporates a non-return valve, a combined pressure reducing/relief valve, and an air dryer.

Windscreen Rain Dispersal

Rain dispersal consists of two complementary systems, a chemical rain repellent and a system using warm air. The screen is coated with a rain repellent chemical as part of routine scheduled maintenance. The repellent is adequate above 200 knots. During low-speed flight, rain may be dispersed by warm air, directed over the outer surface of the screen. The air is tapped from upstream of the cabin temperature control valve and is supplied to the rain dispersal nozzle at the base of the windscreen, via the electrically operated rain dispersal control valve.

Windscreen Wash

The windscreen washing system consists of a pressurized 2,5 liters bottle in the front equipment compartment, which feeds washing fluid through an electrically operated shut-off valve to spray jets in the rain dispersal nozzle. The bottle is pressurized by air tapped from the rain dispersal supply via an air pressure reducing valve, a non-return valve and a windscreen washer bottle deflation valve, operated by the bottle filler cap.

AVIONIC EQUIPMENT COMPARTMENT COOLING

Before engine starting, with the AIR SYSTEM MASTER selected to ON or EMERG RAM AIR and with AC online, cooling air is drawn into the equipment compartments by fans supplied from No. 1 AC busbar. The external ambient air is drawn via pressure boxes except for the rear compartment which uses a shut-off

valve. To warn of a likely equipment overheat due to non-operation of the fans, a warning horn in the right landing gear bay sounds 2 minutes after an undervoltage in the AC supply to the fans is detected (AC not online) if the DC essential busbar is live and engine bleed air pressure is below 50 kPa: Post mod. 00859, in addition to the warning horn, the ECS caption comes on immediately if AC is not online.
When the AIR SYSTEM MASTER is selected to ON, either engine is running above 59% NH, and the air system master and cabin shut-off valves are open, the front and nose equipment compartments are supplied with cooling air discharged via the cabin pressure control valve. If the cabin shut-off valve is closed, cooling air is routed to the front and nose equipment compartments through the cabin by-pass valve. The rear and spine equipment compartments are supplied with cooling air tapped from the main supply between the water extractor and cabin shut-off valve. When both engines are below 59% NH with the AIR SYSTEM MASTER selected ON, the air system master valve automatically closes, and equipment is cooled via the cooling fans in the equipment compartments. When engines are running with EMERG RAM AIR selected the equipment is cooled via the cooling fans in the equipment compartments irrespective of NH value.

ANTI-ICING AND DE-ICING SYSTEM

The engine air intakes are fitted with a de-icing system to ensure that no degradation in engine performance occurs during flight in icing conditions. The cockpit transparencies can be kept clear in all conditions of flight by systems which include windscreen anti-icing and anti-misting, canopy anti-misting, windscreen rain dispersal and windscreen wash.

Engine Intake De-Icing

The engine intake de-icing system includes an independent electrical control unit for each intake. With the system in operation the intake leading edges are heated continuously by heater mats, which initially de-ice, and subsequently prevent ice formation on the intake lips. The areas behind the leading edges and the wall of the rear damper fairings are de-iced by cyclically heated mats.

Windscreen Anti-Icing and De-Misting

The primary method of anti-icing and anti-misting the center windscreen and quarter panels is by electrical gold film heaters, incorporated between the transparency laminations. Because the quarter panel heaters are intended primarily for anti-misting, they are less effective and consume less power than the center windscreen heater.

The heaters are controlled by the W/SCREEN HEATER switch on the rapid take-off panel via control circuits, which automatically regulate the temperature of the outer surfaces. Two normal control circuits are installed, one for the center windscreen and the second for both quarter panels, each being backed up by an overheat control circuit, which regulates at a higher temperature should the normal circuit fail. The center windscreen control circuit incorporates an oleo relay, which ensures that full heater voltage is not applied on the ground, thus reducing the risk of damage due to thermal shock. A standby windscreen de-misting system is provided using warm air, tapped from the rain dispersal supply. The air supply is directed onto the inner surfaces of the windscreen and quarter panels via a shut-off valve, controlled by the STBY W/S DEMIST switch on the environmental control panel.

Canopy De-Misting

The canopy dc-misting system uses warm air, tapped from upstream of the cabin temperature control valve. The air is directed onto the canopy inner surface via an electrically operated shut-off valve. The shut-off valve is controlled by the CANOPY DEMIST - ON/AUTO/OFF switch on the environmental control panel.

ENVIRONMENTAL CONTROL SYSTEM CONTROLS AND INDICATORS

Environmental Control Panel
The environmental control panel, located on the right hand console of the front cockpit, contains the following controls and indicators.

CABIN HEAT CONTROL KNOB
A rotary switch marked CABIN HEAT CONTROL, which controls the cabin temperature. The control switch rotates from the OFF position around an AUTO or MAN scale. Each scale is graduated between COLD and HOT.

CABIN PRESSURE ALTITUDE INDICATOR

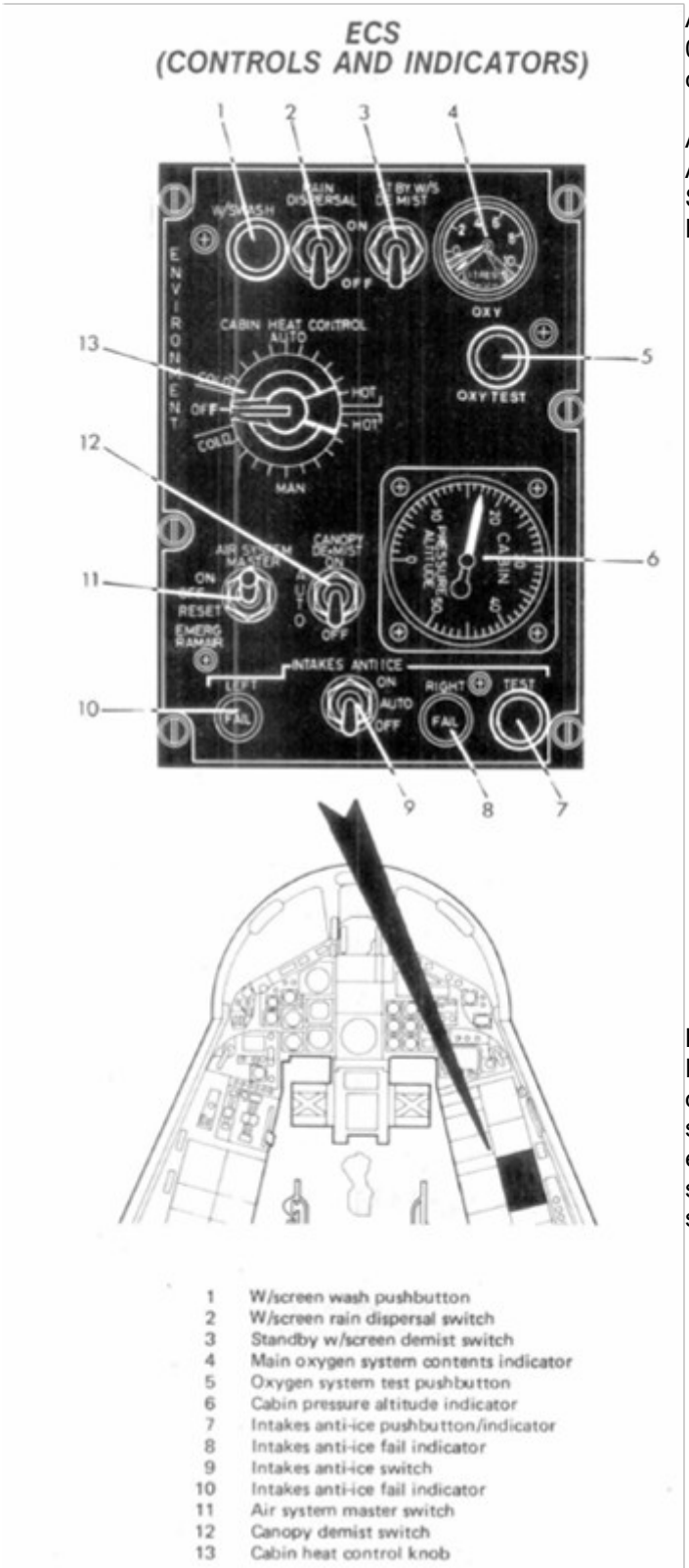

1 W/screen wash pushbutton
2 W/screen rain dispersal switch
3 Standby w/screen demist switch
4 Main oxygen system contents indicator
5 Oxygen system test pushbutton
6 Cabin pressure altitude indicator
7 Intakes anti-ice pushbutton/indicator
8 Intakes anti-ice fail indicator
9 Intakes anti-ice switch
10 Intakes anti-ice fail indicator
11 Air system master switch
12 Canopy demist switch
13 Cabin heat control knob

A cabin pressure altitude indicator, graduate from 0 to 50.000 feet in 1000 feet stages, to indicate cabin equivalent altitude.

AIR SYSTEM MASTER SWITCH
A three-position toggle switch marked AIR SYSTEM MASTER - ON/OFF RESET/EMERG RAMAIR, controls the air supply to the systems.

ON
If both engine speeds are below 59% NH, the equipment compartment fans are switched on. If either or both engines are running at or above 59% the cooling fans are switched off and the air system master valve will open.

OFF
Electrical supply to the air system master.

RESET
Valve interrupted, i.e., valve closes. In the event of valve closure due to an overtemperature or overpressure condition, an attempt may be made to reopen the valve by setting OFF RESET, then returning the switch to ON.

EMERG RAM AIR
Emergency ram air valve actuated and air scoop opened with ground cooling fans activated. Air system master valve selected to close. The equipment compartment cooling fans are switched on. In this position the following services are lost:

- Wing slot sealing
- Anti-g suit supply
- Radar pressurization
- Windscreen rain dispersal and wind-screen wash
- Windscreen de-icing
- Windscreen and canopy de-misting

NOTE for Microsoft Flight Simulator:

Windscreen wash and rain dispersal switch are not operational in this MSFS rendition.

WINDSCREEN WASH PUSHBUTTON
A pushbutton, marked W/S WASH, controls the operation of the windscreen washing system. If the button is momentarily pressed and released, a time delay facility will supply windscreen wash for 3 secs. If the button is pressed and held, the wash operation is continuous.

RAIN DISPERSAL SWITCH
A two-position toggle switch marked RAIN DISPERSAL — ON/OFF. When set to ON, the switch opens a shut-off valve, and hot air is delivered to the base of the windscreen via the windscreen wash nozzle assembly.
STANDBY WINDSCREEN DE-MIST SWITCH
A two-position toggle switch marked STBY W/S DEMIST — ON/OFF. In the event of a failure of the main windscreen heating system, with the switch set to ON, hot air is supplied to the windscreen and quarter panel de-misting spray heads.

INTAKES ANTI-ICE TEST PUSHBUTTON/INDICATOR
Pre mod. 00629 — Not operative
Post mod. 00629
The anti-icing system serviceability may be tested on ground or in flight provided that the INTAKES ANTI-ICE switch is in the AUTO position. To perform a Bite test, the pushbutton/indicator labelled INTAKES ANTI ICE-TEST shall be pressed. The green indicator illuminates for approx. 3 secs. If a malfunction in the intakes anti-ice system is detected during the test period, the respective INTAKES ANTI ICE-FAIL indicator will illuminate.

INTAKES ANTI-ICE FAIL INDICATOR
Two amber lights marked INTAKES ANTI ICE — LEFT-FAIL/RIGHT-FAIL illuminate to indicate partial failure of, or shut down of, the intakes anti-ice system (with the intakes anti-ice switch in the AUTO or ON position).

INTAKES ANTI-ICE SWITCH
The intakes anti-ice switch is a three-position toggle switch, marked INTAKES ANTI ICE —ON/AUTO/OFF. It controls the mode of operation of the intakes anti-ice system.

ON	Ice protection system for both engine intakes is initiated, provided that the oleo relay is in the "flight" position
AUTO	Not operative. Post mod. 00629. Automatic ice detection system is enabled. The ON position shall not be used.
OFF	Ice protection circuits are switched off

CANOPY DE-MISTING SWITCH
The canopy de-misting switch is marked CANOPY DEMIST — ON/AUTO/OFF.

ON	The canopy de-mist control valve is selected open
AUTO	Automatic operation controlled by a de-mist temperature sensor
OFF	The canopy de-mist control valve is selected close

Windscreen Heater Switch

The rapid take-off panel in the front cockpit carries a two-position toggle switch marked W/SCREEN HEATER and has two positions FLIGHT and OFF.

FLIGHT	Power is applied to the center windscreen and both side screen quarter panels heaters.
OFF	Power to the heaters is switched off.

The switches on the rapid take-off panel can be set to the FLIGHT position either individually or by use of the RAPID TAKE-OFF ganging lever; the OFF position can only be selected individually.

OXYGEN SYSTEM

The oxygen system consists of a main (liquid) system, located in the left side of the fuselage, and an emergency (gaseous) system on the rear of each ejection seat.

MAIN OXYGEN SYSTEM

The main oxygen system supply consists of a 10 liters liquid oxygen converter, which converts the liquid oxygen to 7600 liters of gaseous oxygen, a warming coil, which heats the gas to a temperature suitable for

breathing, two connector assemblies, two shut-off valves on individual service units, and a regulator, attached to the forward face of each personal equipment connector (PEC).
From the regulator, the oxygen or the air-oxygen mixture passes back into the PEC and then through a flexible hose and mask socket to each crewmember's breathing mask.
A two-position sliding control on the regulator provides for selection of air mix or 100% oxygen supply.
In addition, a two-position yellow and black striped ring grip, when pulled, selects the emergency oxygen supply and the 100% oxygen regulator. Each service unit contains a flow sensor, a pressure switch and a pressure reducing valve. A transducer between the service unit and the regulator, supplies a pressure reading to the crash recorder.
The oxygen converter may be recharged in the aircraft or replaced readily by a full unit.

EMERGENCY OXYGEN SYSTEM

The emergency oxygen system consists of two oxygen, bottles, one bottle on each seat (70 liters of gaseous oxygen), a pressure reducer and a pressure gage. The system can be activated by pulling a ring grip of the emergency oxygen selector on the left side of the seat pan. Pulling the grip selects the oxygen regulator to 100% oxygen delivery.
Automatic selection takes place as the ejection seat rises during ejection.
The emergency oxygen bottle may be recharged in situ. Each bottle provides a 3–4-minute supply of 100% oxygen.

OXYGEN SUPPLY SYSTEM CONTROLS AND INDICATOR

Oxygen Shut Off Cock

An oxygen shut off cock is a two-position toggle switch, marked ON/OFF and controls the supply of oxygen to the regulator in the associated cockpit.

Oxygen Regulator

The oxygen regulator, situated on the left side of the seat pan, comprises an air mix demand-type regulator, located in a common housing, plus a pressure compensated dump valve for both regulators. A selector on top of the oxygen regulator operates a change-over valve to open the supply passage to whichever regulator is required. In cases of sudden pressure increases in the oxygen mask delivery, rapid decompression or regulator failure, the dump valve relieves to ambient. The air mix regulator delivers an oxygen/air mixture. The ratio is determined by an aneroid-operated air inlet valve and thus varies according to cabin altitude. With increasing altitude, the valve. reduces the air percentage until, at 32.000 feet it is closed and 100% oxygen is delivered.
Below 15.000 feet, delivery is at ambient pressure. Between 15.000 feet and 38.000 feet, delivery is made at a slight pressure (termed safety pressure). Above this upper level, pressure breathing is introduced, with pressure increasing linearly with altitude up to 50.000 feet.
Between 0 and 38.000 the 100% 02 regulator delivers 100% at a slight pressure (also termed safety pressure). Above this upper level, pressure breathing is introduced, with pressure increasing linearly with altitude up to 50.000 feet.
A spring-loaded push button on top of the regulator is used to test regulator delivery and confirms that the crewmember's mask is correctly fitted. For test the regulator selector shall be set to AM. The two-position sliding control, spring-loaded to both positions, marked AM/100, selects either the air mix or the 100% oxygen regulator.

Main Oxygen System Contents Indicators and Test Button

The main oxygen system contents indicators are single needle indicators which are graduated in 2-liter divisions from 0 to 10 with a green sector before the 0 and a red sector beyond the 10.
Each indicator receives a signal from a contents probe located in the liquid oxygen (LOX) converter. An unserviceable probe is indicated when the indicator needle enters the red sector. A test button labelled OXY TEST, when pressed, drives the needle into the green sector to prove indicator serviceability.
In addition, a filling point indicator, located on the left hand side of the LOX converter, is identical to the cockpit indicators with the exception of a yellow/gold "full" indication adjacent to the 10 liter mark.

Oxygen Flow Indicator

Two magnetic indicators are marked OXY-FRONT and REAR. The indicators enable the oxygen flow to be monitored. The indicators show black and white stripes when no oxygen is flowing, and white oxygen is being drawn.

OXYGEN SUPPLY AND DISTRIBUTION

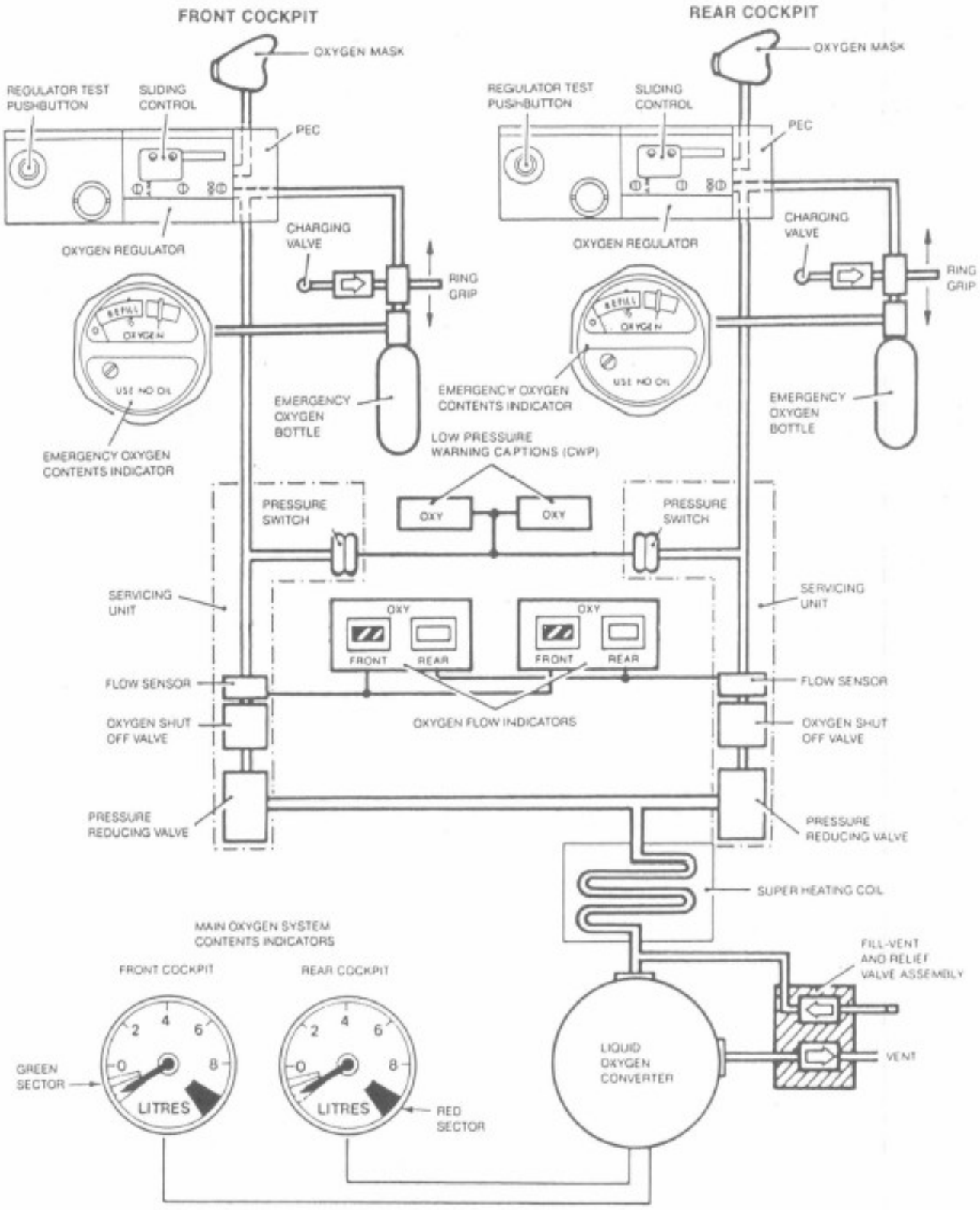

OXYGEN DURATION

OXYGEN DURATION – HOURS										
FERRY NON-AEROBATIC FLIGHTS										
Cockpit Indicator Quantity-Litre / Cockpit Altitude-feet	10	9	8	7	6	5	4	3	2	1
35000 and above	24.6 24.6	22.1 22.1	19.7 19.7	17.2 17.2	14.8 14.8	12.3 12.3	9.8 9.8	7.4 7.4	4.9 4.9	2.4 2.4
30000	18.7 19.0	16.9 17.1	14.9 15.2	13.1 13.3	11.2 11.4	9.35 9.5	7.5 7.6	5.6 5.7	3.7 3.8	1.9 1.9
25000	14.4 15.8	12.9 14.2	11.5 12.6	10.1 11.1	8.6 9.5	7.2 7.9	5.8 6.3	4.3 4.7	2.9 3.2	1.4 1.6
20000	10.8 12.7	11.4 11.4	8.6 10.2	7.6 8.9	6.5 7.6	5.4 6.3	4.3 5.1	3.2 3.8	2.2 2.5	1.1 1.3
15000	8.8 15.8	7.9 14.2	7.0 12.6	6.2 11.1	5.3 9.5	4.4 7.9	3.5 6.3	2.6 4.7	1.7 3.2	0.9 1.6
10000	7.0 13.9	6.3 12.5	5.6 11.1	4.9 9.7	4.2 8.3	3.5 6.95	2.8 5.6	2.1 4.2	1.4 2.8	0.7 1.4
5000	5.6 11.0	4.9 9.9	4.5 8.7	3.9 7.7	3.3 6.6	2.8 5.5	2.2 4.4	1.7 3.3	1.1 2.2	0.6 1.1
Sea Level	3.5 8.9	3.2 8.0	2.8 7.1	2.4 6.2	2.1 5.3	1.75 4.45	1.4 3.6	1.1 2.7	0.7 1.78	0.4 0.9
COMBAT MISSION AND TRAINING AEROBATIC FLIGHTS										
35000 and above	13.0 13.0	11.7 11.7	10.4 10.4	9.1 9.1	7.7 7.7	6.5 6.5	5.2 5.2	3.9 3.9	2.6 2.6	1.3 1.3
30000	11.1 12.2	10.0 11.0	8.9 9.8	7.8 8.5	6.7 7.3	5.5 6.1	4.4 4.9	3.3 3.6	2.2 2.4	1.1 1.2
25000	9.5 14.2	8.5 12.8	7.6 11.4	6.6 9.9	5.7 8.5	4.7 7.1	3.8 5.7	2.9 4.2	1.9 2.8	0.9 1.4
20000	7.5 13.1	6.8 11.8	6.0 10.5	5.2 9.2	4.5 7.8	3.7 6.5	3.0 5.2	2.2 3.9	1.5 2.6	0.7 1.3
15000	6.1 12.2	5.5 11.0	4.9 9.8	4.3 8.5	3.7 7.3	3.0 6.1	2.4 4.9	1.8 3.6	1.2 2.4	0.6 1.2
10000	5.0 10.0	4.5 9.0	4.0 8.0	3.5 7.0	3.0 6.0	2.5 5.0	2.0 4.0	1.5 3.0	1.0 2.0	0.5 1.0
5000	4.2 8.4	3.8 7.6	3.4 6.7	2.9 5.9	2.5 5.0	2.1 4.2	1.7 3.4	1.2 2.7	0.8 1.7	0.4 0.8
Sea Level	3.5 7.1	3.1 6.4	2.8 5.7	2.4 5.0	2.1 4.3	1.7 3.5	1.4 2.8	1.0 2.1	0.7 1.4	0.3 0.7

NOTE

- Upper values indicate operating lever in 100% oxygen position
- Lower values indicate operating lever in AIRMIX position
- The duration time is doubled when only one crewmember is using oxygen.

OXYGEN SYSTEM
(CONTROLS AND INDICATORS)

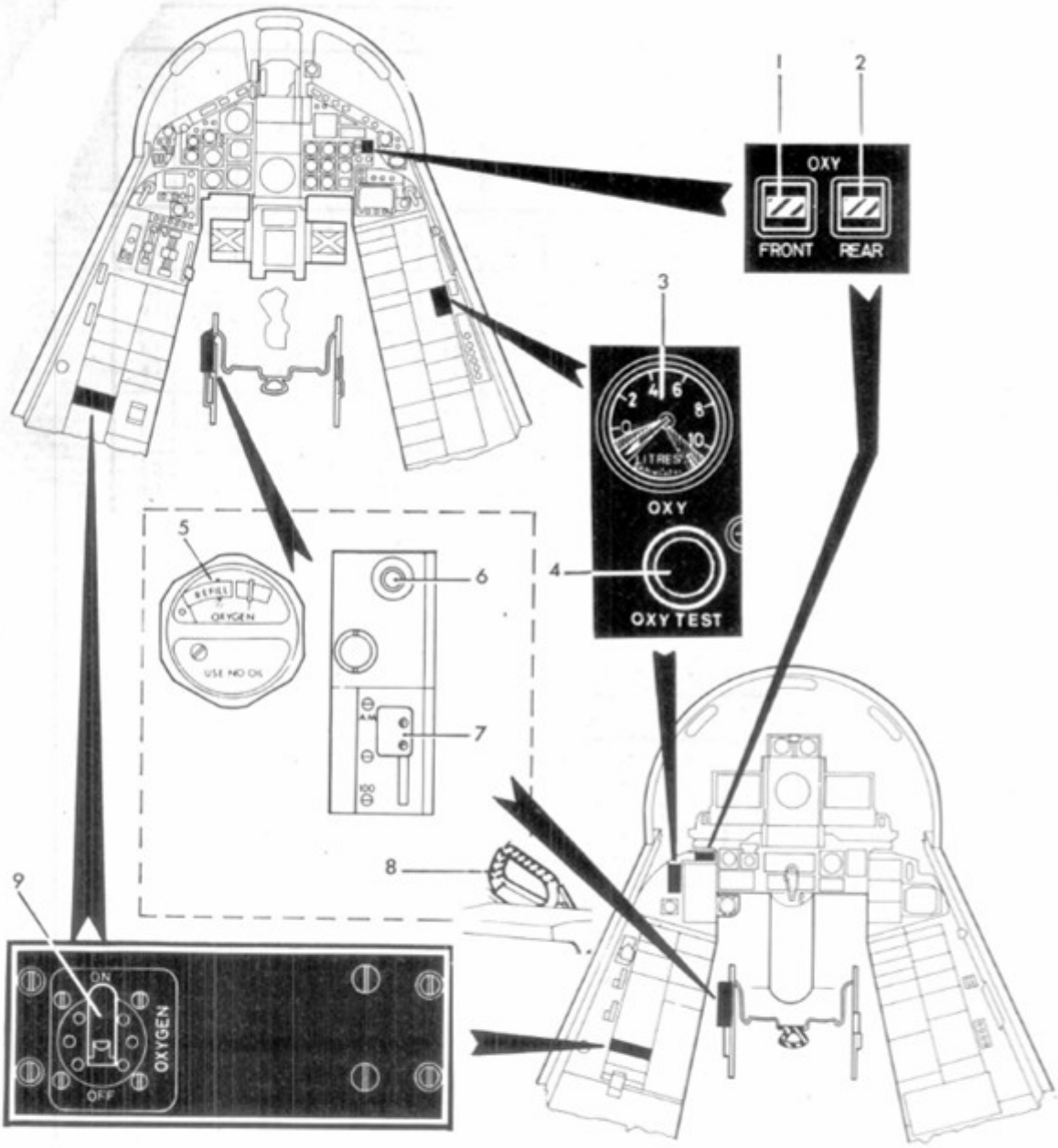

1 Front oxygen flow indicator
2 Rear oxygen flow indicator
3 Main oxigen system contents indicator
4 Oxygen system test pushbutton
5 Emergency oxygen pressure indicator
6 Regulator test button
7 Oxygen selector
8 Emergency oxygen grip
9 Oxygen shut off cock.

Emergency Oxygen Pressure Indicator

Located on the left side of the seat pan in each cockpit, a single-needle pressure indicator indicates the contents of the emergency oxygen bottle. The gage dial is divided into two sectors, one outlined in orange and marked REFILL and the second outlined in green with a radial green band to indicate "full".

Central Warning Panel OXY Caption

A red OXY caption on each cockpit central warning panel illuminates when the pressure in the main oxygen system falls below 290 Pa, or when an oxygen shut-off valve is at OFF with electrical power on the aircraft.

LIGHTING SYSTEM

The lighting system is divided into external and internal lights.

EXTERNAL LIGHTING

The external lights include navigation, obstruction, formation, anti-collision, landing, and taxi lights, controlled by switches on the external lights panel in the front cockpit. A ganging bar, on the external lights panel, allows the navigation, obstruction, formation, and anti-collision lights to be simultaneously switched off. A flight refueling PROBE LIGHT is controlled by a switch on the press-to-transmit switch panel in the rear cockpit.

Navigation Lights

The navigation (position) lights consist of a red light, located on the outboard side of the left engine air intake, a green light on the outboard side of the right engine air intake, and two white lights (combine navigation/obstruction lights) one on each side of the trailing edge of the upper fin. All lights are controlled by the NAV — ON/OFF switch on the external lights panel. The lights can be controlled and selected to two levels of brilliance, and either flashing or steady by the NORM/DIM and FLASH/STEADY switches on the same panel.

NOTE

With navigation light ON and selected to FLASH, the fin lights do not flash if the obstruction lights are selected ON.

NOTE for Microsoft Flight Simulator:

Flash functionality is not completely implemented in MSFS, and will only affect the projected lights.

The navigation lights are supplied from the AC busbar 2.

Obstruction Lights

The obstruction lights consist of a red light on the left wing tip, a green light on the right wing tip and a white light (combined navigation/obstruction light) on the trailing edge of the upper fm. The obstruction lights consist of a red light on the left wing tip and a green light on the right wing tip. The lights are controlled by the OBST — ON/OFF switch and are supplied from the maintenance busbar.

Formation Lights

Two violet formation lights are installed on the upper and lower surface of each outer wing and controlled by the FORM — ON/OFF switch and supplied from the DC busbar 1.

Anti-Collision Lights

Two red anti-collision strobe lights are installed, one on the upper center fuselage and one on the lower from fuselage. Each light produces a beam, giving between 80 to 100 flashes per minute. The lights are controlled by the A/COLL-ON/OFF switch.

Landing/Taxi Lights

The landing lights are installed, one on each main landing gear door, and a single taxi light on the nose wheel strut. A three-position toggle switch, marked LAND/OFF/TAXI, controls the lights and ensures that the landing and taxi lights cannot be selected together. The left landing light is supplied from the AC busbar 1 and the right landing light and taxi light from the AC busbar 2. Power to all three lights is only available, when the landing gear selector lever is in the DOWN position. The landing lights have a maximum operating period of 30 minutes, followed by a compulsory 15-minute cooling period.

Flight Refuel Probe Light

A floodlight is mounted on the flight refueling probe to facilitate inflight refueling at night. The lamp brightness is controlled by the REFUEL PROBE LIGHT switch located on the refuel probe light control panel in the rear cockpit. The light can only be used, when the PROBE switch on the fuel control panel is set to OUT or EMERG OUT.

INTERNAL LIGHTING

Internal lighting of the front and rear cockpit is provided by floodlight, anti-dazzle lights, and wander lamps. Instrument and control panels are illuminated by filament lamps, pilar lamps, and electroluminescent panels. Power for instrument lamps is supplied from the XP1 and XP2 AC busbar. Power for front and rear cockpit lighting is supplied from PP2, PP3 and PP4 DC busbars.

Floodlights

Red floodlights, controlled by the FLOOD-FRONT PANEL and FLOOD CONSOLES rotary dimmer switches on the internal lights panel, illuminate the main instrument panels, the left and right quarter panels, and both consoles in both cockpits. The red floodlight over the rear cockpit CRPMD is controlled by the rear cockpit. FLOOD-CONSO LES dimmer switch. All floodlights are supplied from the PP3 DC busbar. A dimmer switch, labelled WAMS located on the instrument dimmer switch panel controls the intensity of the indications in the pilot's WAMS control switches.

Anti-Dazzle Lights

High intensity floodlights are installed in the front and rear cockpit to illuminate the main instrument panels when required. These lights are controlled by the ANTI-DAZZLE-BRT/OFF/DIM switch,
located on the miscellaneous switch panel and power is supplied from the PP2 DC busbar. The floodlights are normally used during thunderstorm conditions or when instrument panel illumination is inadequate.

Wander Lamps

Wander lamps are fitted in the front and rear cockpit and are supplied with power form the battery busbar. For emergency illumination is provided a secondary mounting. The front barrel of the lamp can be rotated to any one of four positions to provide a red or white light with a spot or floodlight beam. The intensity is controlled by a knurled ring at the rear. A flasher button at the rear of each lamp provides full brilliance regardless of the position of the knurled ring.

NOTE for Microsoft Flight Simulator:

Wander lamps are not functional in MSFS.

Pillar Lights

Pillar lighting for the clock in each cockpit is controlled by the relevant INTEGRAL-INSTRUMENTS rotary dimmer switch. Power is supplied from the XP1 AC busbar.

Integral and Electroluminescent Lighting

The integral lighting of the HUD control panel and the left anti-glare shield is controlled by the EL rotary dimmer switch on the instrument dimmer switch panel.
The integral lighting of the AOA indicator and the accelerometer in the front cockpit is controlled by the HEAD UP INST rotary dimmer switch on the pilot's hand controller panel.
All electroluminescent lighting together with the integral lighting of instruments and indicators of the consoles, is separately controlled by the INTEGRAL-CONSOLES dimmer switches in each cockpit. Power to the integral and electroluminescent lighting is supplied from AC Busbar 1

CCS Station Box Lights

The COMMS rotary dimmer/switch located on the internal lights panel controls the DC power supply and the intensity of the integral illumination of the communications control equipment station box and the IFT control unit. It also controls the lighting of the IFF control panel. Power is supplied from the PP1 DC busbar.

Lamps Test

A lamp test facility is provided in each cockpit to test the filaments of all indicator lights, warning lights and integrally illuminated push buttons on the instrument panels and consoles. The FRONT PANEL switches, when set to TEST, check the lights on the main instrument panels, quarter panels and antiglare shields in the respective cockpit. The CONSOLES L and R switches (2) on the same panel, when set to TEST, check the lights on the appropriate console in the respective cockpit.

COMMUNICATION EQUIPMENT

Communication equipment consists of the following units:

- Communication Control System (CCS) Panel
- V/UHF Radio
- Remote Frequency/Channel Indicator (RFCI)
- UHF Emergency Radio
- LIF/SSB Radio
- Pilot's Hand Controller (PHC) Panel
- Groundcrew Connector
- Telebriefing Connector
- PTT Controls
- Cockpit Voice Recorder (CVR)

CCS PANEL

NOTE for Microsoft Flight Simulator:

CCS functionality is limited to COM radio and Navaids audio – most of the switches and knobs can be operated but have no function in the game.
Most of the content of this paragraph is provided for information only.

The CCS panel enables correlation of audio signals produced and/or received by the aircraft. The CCS consists of two identical control panels (one in the front cockpit and the other one in the rear cockpit), a junction box, a groundcrew jack box with intercommunication connector, a telebriefing connector and three independent press-to-transmit (PTT) switches, two in the front cockpit and one in the rear cockpit. Control panel facilities are provided for each crewmember of take over control of the V/UHF communication.
A voice operated switch (VOS) is available in each cockpit. The VOS allows intercommunication (I/C) between both cockpits without operating any control elements. Speaking into the microphone automatically keys an amplifier and establishes I/C audio contact.
The groundcrew connector permits the use of a headset outside the aircraft to provide I/C between aircrew and groundcrew. By pressing his press-to-speak (PTS) button, the ground crewman is able to communicate with the aircrew. By setting the MUTE/NORM/CALL toggle switch to. CALL position either member of the aircrew is able to contact the groundcrew. The CCS operates on 28 V DC from the PP3 essential busbar.
All audio warnings produced by various aircraft systems and identification signals from radio navigation aids are routed to the aircrew headsets. Volume of radio navigation aids can be adjusted by volume controls on the relevant control panels. Aircraft system warnings are transmitted at an audio level sufficiently high enough to attract the crew's attention.
To gain complete control of the V/UHF transceiver and UHF Communication Antenna switch from a particular cockpit, the PUSH TO CONTROL button on the CCS control panel in that cockpit shall be pressed. The PUSH TO CONTROL lamp on the CCS panel in that cockpit which has taken over control is then Operating mode and frequency, or channel required can only be selected on the activated V/UHF control panel. On the non-activated V/UHF control panel the frequency display is blanked. The required antenna for UHF band communications may be selected by the UHF Antenna Selector on the CCS control panel. V/UHF volume is controlled on both CCS controls panels individually for each cockpit.

CCS Panel Controls

CCS panel controls are shown in figure. Panels are identical in front and rear cockpits. Functions are as follows:

INTERCOMMUNICATION VOLUME CONTROL (IC)

A rotary control adjusts the volume of intercommunication audio signals. Volume cannot be fully reduced to zero.

MISSILE VOLUME CONTROL (MSL)
A rotary control which adjusts the volume of A/A missile audios. (Post Mod. 01742 MSL volume control does not change its function).

COMMUNICATION SYSTEM (CONTROLS AND INDICATORS)

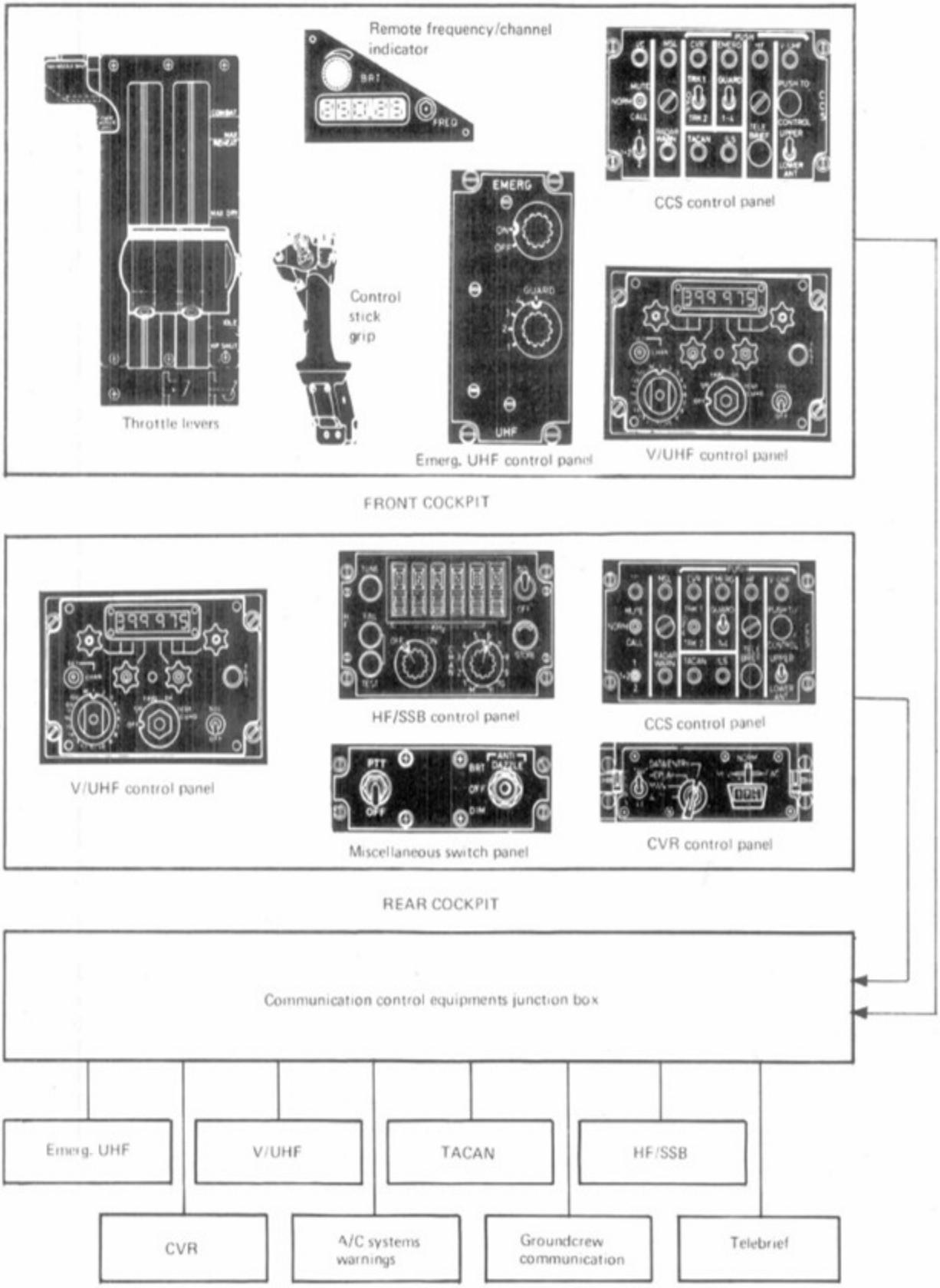

AUDIO WARNING AND IDENTIFICATION SIGNAL

WARNINGS	SIGNAL	COMMS CP VOLUME CONTROL	CANCELLABLE
Engine Fire Primary CWP Warnings Undercarriage up	"Lyre Bird" Tone	None	Press attention Getter in appropriate cockpit
Low Height Reverse Thrust Re-ingestion Manoeuvre Monitor NSAS Failure	Interrupted medium horn tone (600 Hz)		
Passive Warning Radar	– Siren Tone – Two-tone alarm	Radar Warn	Reduce to zero volume Control
Tacan	Morse coded identify	TACAN	– Reduce to zero volume Control – Select MUTE
Missile	1500 Hz	MSL	Select MUTE

COMBINED PUSHBUTTONS/ROTARY CONTROLS
Four pushbutton/rotary controls labelled PUSH: CVR, EMERG, HF, V-UHF. Operating principles for these four controls are identical. When pushed in:
Four pushbutton/rotary controls labelled PUSH: CVR, EMERG, HF, V-UHF. Operating principles for these four controls are identical. When pushed in:

CVR — CVR notebook facility will be selected.

EMERG — UHF emergency radio transmitting facility and modulation line will be selected, and equipment will be switched on, irrespective of ON/OFF switch

HF — HF transmitting facility and modulation line will be selected

V-UHF — V-UHF transmitting facility and modulation line will be selected

A second press cancels all facilities, respectively disable's transmitting of the UHF emergency radio. Turning the controls adjusts volume. The pushbuttons are illuminated white when pressed in, provided that the COMMS switch on the INTERNAL LIGHTS panel is on.

CHANNEL OVERRIDE SWITCH (GUARD)
A switch with two positions, GUARD and 1-4. Placing the switch in either cockpit to GUARD selects the emergency frequency on the UHF emergency transceiver and permits radio communication on GUARD only. Placing the switch to 1-4 in both cockpits allows selection of any one of four available channels, on the UHF emergency transceiver.

V/UHF CHANGEOVER PUSHBUTTON (PUSH TO CONTROL)
A pushbutton combined with a green integrated indicator lamp. Pushing the button in activates the V/UHF control and the UHF antenna selector in the relevant cockpit and the green indicator PUSH TO CONTROL illuminates to show that the V/UHF transceiver is controlled from that cockpit. Post mod 01661: pressing either PUSH TO CONTROL button transfers control to or from either cockpit. The green light is on in the cockpit which has control.

UHF ANTENNA SELECTOR (UPPER/LOWER ANT)
A two-position toggle switch. Placing the switch to UPPER connects the upper UHF antenna to the V/UHF transceiver and the lower antenna to the UHF emergency transceiver. Placing the switch to LOWER reverses the connections. Functioning of this control is dependent on the position of the V/UHF changeover pushbutton PUSH TO CONTROL.

TELEBRIEF BUTTON (TELEBRIEF)
A combined pushbutton/indicator lamp. The amber indicator illuminates when the telebrief landline is connected to the aircraft. Pressing the TELEBRIEF pushbutton keys the relevant aircrew microphone for telebrief and inhibits all transmitting functions and the groundcrew contact (Pre Mod. 01742).

ILS VOLUME CONTROL (ILS)
A rotary volume control knob (not operative).

TACAN VOLUME CONTROL (TACAN)
A rotary volume control knob, for adjustment of the TACAN audio volume. Volume cannot be reduced to zero.

RADAR WARNING VOLUME CONTROL (RADAR WARN)
A rotary volume control knob marked RADAR WARN, which adjusts the volume of pulse repetition frequency (PRF), new threat and missile attack radar warning tones.

AMPLIFIER SELECTOR (1/1 + 2/2)
A three-position toggle switch, normally in 1 + 2 position (both amplifiers on). If one amplifier fails, back-up operation can be established by placing the switch to either position 1 or 2.

COCKPIT VOICE RECORDER TAPE TRACK SELECTOR (TRK1/OFF/TRK2)
A three-position toggle switch. Placing the switch to either TRK1 or TRK2 selects the appropriate CVR tape track for replay. In OFF position the CVR replay audio in the relevant cockpit is shut off.

RADIO OVERRIDE SWITCH (NORM/CALL/MUTE)
A toggle switch with the positions:
NORM/CALL/MUTE, spring loaded to NORM, and has the following functions:

NORM
The communications system operates normally, and all audio signals are routed to both headsets. Intercom operates between cockpits with audio volume independently adjustable at CCE control panel. If the notebook facility (CVR) is in operation or any PTT button is pressed, intercom between front and rear cockpit is inhibited.

CALL
With the switch held in this position the CALL function overrides the VOS and I/C volume controls, and establishes audio contact between cockpits at max volume.

MUTE
With the switch held in this position, all audio signals to both cockpits are inhibited with the exception of V/UHF Guard and audio warnings, the switches in the front and rear cockpit operate in parallel.

CGS OPERATION

Transmission may be made from either cockpit by pressing a PTT button or by activating the TRANSMIT/OFF switch on the miscellaneous switch panel in the rear cockpit.
The UHF emergency radio may be activated by pilot selection on the UHF emergency control panel or by either crewmember pressing the EMERG button on the CCS control panel. Transmit/receive facilities are available to both cockpits on the set frequency.
Recording facility are provided by the CVR. The pilot's voice is recorded on track 1 and that of the navigator on track 2. With the CVR pushbutton on the CCS control panel in the de-selected position (i.e., "out"), the CVR will record all audio signals occurring in the crewmembers' headsets. Depressing the CVR pushbutton on a CCS panel inhibits intercom and during recordings from that cockpit all audio signals, except that crewmember's voice, are inhibited.

COMMUNICATION SYSTEM (CONTROLS AND INDICATORS)

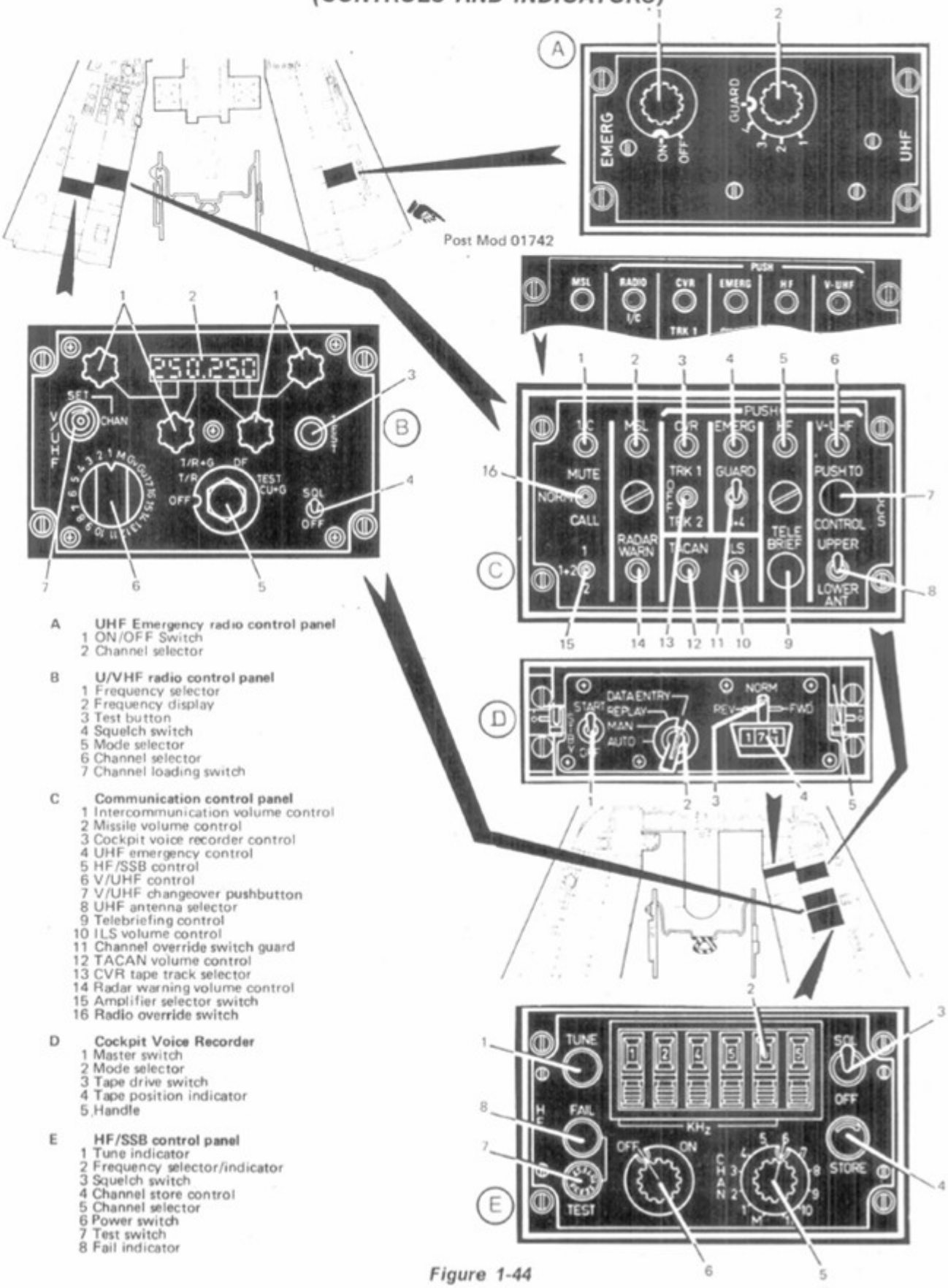

A UHF Emergency radio control panel
1 ON/OFF Switch
2 Channel selector

B U/VHF radio control panel
1 Frequency selector
2 Frequency display
3 Test button
4 Squelch switch
5 Mode selector
6 Channel selector
7 Channel loading switch

C Communication control panel
1 Intercommunication volume control
2 Missile volume control
3 Cockpit voice recorder control
4 UHF emergency control
5 HF/SSB control
6 V/UHF control
7 V/UHF changeover pushbutton
8 UHF antenna selector
9 Telebriefing control
10 ILS volume control
11 Channel override switch guard
12 TACAN volume control
13 CVR tape track selector
14 Radar warning volume control
15 Amplifier selector switch
16 Radio override switch

D Cockpit Voice Recorder
1 Master switch
2 Mode selector
3 Tape drive switch
4 Tape position indicator
5 Handle

E HF/SSB control panel
1 Tune indicator
2 Frequency selector/indicator
3 Squelch switch
4 Channel store control
5 Channel selector
6 Power switch
7 Test switch
8 Fail indicator

Figure 1-44

V/UHF RADIO

The V/ UHF transceiver is the main radio equipment which provides voice communication in the VHF band and in the UHF, band also providing simultaneous monitoring of the relevant distress frequency. During UHF communications the equipment operates in combination with the UHF Communications Antenna Switch Unit: during VHF communications the radiofrequency is routed through the V/ UHF Upper Antenna. Control is with the cockpit in which the CCS panel PUSH TO CONTROL lamps is illuminated, however, the receive functions are available to both cockpits.
The transmitter/transceiver, located in the rear avionics compartment, operates in the VHF frequency hand and the UHF frequency band.

V/UHF Control Panel

A V/UHF control panel is installed in each cockpit: controls are identical. The function of each control is as follows:

CHANNEL LOADING SWITCH
A switch labelled SET CHAN which shall be rotated clockwise and pressed to load the frequency, set by the frequency selector, into the channel seat at the channel selector.

FREQUENCY SELECTORS
Four rotary controls (six digits) used for manual selection of frequency shown on the frequency display.

FREQUENCY DISPLAY
A seven bar six-digit display which shows, in MHz units, the frequency set by the frequency selectors of the frequency of the channel selected by the CHAN selector.

TEST BUTTON
A pushbutton labelled TEST to initiate the Interruptive BITE sequence appropriate to the mode selected.

SQUELCH SWITCH
A two-position toggle switch labeled SQL/OFF. Selection to SQL results in a reduction of the received noise level.

MODE SELECTOR
A five-position rotary switch with the following functions:

OFF	The power supplies are disconnected. This position is guarded to prevent inadvertent selection.
T/ R	The Main Transmitter/ Receiver of the equipment is activated.
T/ R+G	The Main Transmitter/Receiver and a Guard Receiver are activated.
DF	When a VHF frequency is selected, the Main Transmitter Receiver is activated. When a UHF frequency is selected the UHF/ADF equipment, and the Main Transmitter/Receiver is activated.
TEST CU+G	Enables Interruptive BITE to be carried out on the Control Unit and the Guard Receivers

CHANNEL SELECTOR
A rotary switch labelled CHAN with the following twenty positions:

M
The Main Transmitter/Receiver is tuned to the frequency shown on the Frequency Display.
1-17
Allows 17 channels to be preset and selected as required
Gu
The Main Transmitter/Receiver is set to the UHF distress frequency (243,0 MHz).
Gv
The Main Transmitter/Receiver is set to the VHF distress frequency (121,5 MHz).

V/UHF RADIO OPERATION

V/UHF Bite

The BITE provides interruptive monitoring of V/UHF equipment. The BITE circuits are controlled by the TEST button on CU, the function selector, SENS switch, CHAN switch and a PTT switch. Circuits within a CU check that the displays on both CU and RFCI are serviceable and that the channel store within the CU is serviceable. The BITE circuits are only functional within the selected CU. Circuits within the RX/TX check the transmitter power output and modulation depth, main and guard receiver sensitivity.
To take control of the V/ UHF transceiver and of the UHF Communications Antenna Switch Unit, the V/UHF changeover pushbutton on the Comms CP shall be pressed: the integral green indicator will illuminate to confirm that the control is taken in that cockpit. To switch on the V/ UHF Transceiver the mode selector shall be set to any position except OFF. The required frequency is selected either, by positioning the channel selector at the corresponding channel number or by setting the channel selector to position M and using the manual frequency selectors to set the required frequency on the frequency display. When normal transmission and reception is required the mode T/R shall be selected; when, in addition, monitoring on the distress frequency is desired, the mode T/R +G shall be selected. If a UHF frequency is selected, the UHF antenna selector shall be positioned in such a way to get the best signal. The received audio level is adjusted using the V/ UHF Control on the Comms CP. The Sensitivity switch on the CU should normally be used in the SQL position; the OFF position should be selected when the signal strength falls below an acceptable level notwithstanding UHF Antenna Selector operation. During any equipment function and independently of the CU in use, the Pilot is able to check the operating frequency by using the RFCI.

Channel/Loading

To load a frequency in a channel, set the channel selector to the required channel number. Select the required frequency by using the Frequency Selector, press and turn clockwise the SET CHAN switch. To confirm that the frequency is correctly, loaded into the memory, the pilot shall press the FREQ button on the RFCI: the frequency will appear in the Display. The display shows the number of the channel selected when the FREQ button is released.

Channel Selection

Set mode selector knob to T/R, T/R + G and rotary switch CHAN to M. In this manner the Main Transmitter/Receiver is tuned to the frequency shown on the Frequency Display and controlled by the four Frequency Selectors Knobs.

REMOTE FREQUENCY/CHANNEL INDICATOR (RFCI)

The remote frequency/channel indicator functions in association with the V/UHF radio control panel, and enables the pilot to monitor the frequency in use, regardless if selected in front or rear cockpit. Presentation is made by a five-digit display with decimal point for frequency display, and with the prefix CH and two-digit channel number, when acting as a channel display. A rotary control marked DIM is used to control display brightness.

UHF EMERGENCY RADIO

The UHF emergency radio equipment provides two away air-to-air-to ground communication and has four preset channels (1 4), and one GUARD channel. The equipment can also be used in case of equipment failure.
Power to the UHF emergency radio is supplied from the PP3 DC busbar.

UHF Emergency Radio Control Panel

These controls function as below:

ON/OFF SWITCH KNOB (ON/OFF)
A two-position rotary switch which controls the power supply to the UHF emergency radio.

CHANNEL SELECTOR SWITCH KNOB (GUARD)
A five-position rotary switch with the following positions:

- 1-4 selects one of four pre-set channels.
- GUARD selects a channel pre-set to the international emergency frequency.

UHF Emergency Radio Operation

To receive, the required channel is set with the UHF channel selector switch. In addition, the ON/OFF switch

shall be set to ON, or alternatively the EMERG pushbutton on one of the CCS control panels shall be pressed.
To transmit, the EMERG pushbutton on the CCS panel and one of the PTT- buttons shall be pressed. Alternatively, UHF communication on the international emergency frequency may be established by selecting the channel override switch on either CCS control panel to GUARD, and provided that the EMERG pushbutton on one of the CCS control panels is depressed, transmission may be made through the PTT pushbuttons.

PRESS-TO-TRANSMIT CONTROLS

V/ UHF and UHF emergency transmission can be initiated from one of the following PTT switches:

Front Cockpit:	Control Stick Grip	
	Throttle Lever	
Rear Cockpit:	Control Stick Grip	
	Throttle Lever	(only IT)
	Miscellaneous Switch Panel	(only IS)

An UHF antenna switching unit provides changeover switching between the upper and lower UHF antennas and the main V/UHF emergency radio. The antenna switching unit is controlled by a switch on the CCS panel. Power is supplied from the X P3 AC busbar and from the PP2 DC busbar.

TRANSMITTING

Transmissions are made by pressing one of the PTT switches in either cockpit.

RECEIVING

Reception volume can be individually controlled in each cockpit with the V/UHF control knob on the CCS control panel.

HF/SSB Radio (Post mod. 10809)

The HF/SSB equipment provides the aircraft with a means of a long range, single channel, voice communication. The receive and transmit functions may be selected from either of the cockpits, but channel selection and other control functions can only be selected in the rear cockpit. The equipment operates in the frequency band 2,0 to 29,9999 MHz Frequency spacing is 100 Hz, stability is ± 5 Hz and there are eleven preset frequencies available by channel selection. The equipment comprises a Receiver/Exciter (R/E), a Power Amplifier (PA), a Control Frequency Selector (CFS), an Antenna Tuning Unit (ATU) a Control Panel and a notch antenna, which is an integral part of the airframe. The HF/SS receives a three phase 200V, 400 Hz supply from the XP1 AC busbar and a 28V DC supply from the PP2 DC busbar.

HF/SSB Control Panel

HF/SSB control panel is installed in the rear cockpit; the function of each control is as follows:

TUNE INDICATOR	A white indicator labelled TUNE which is illuminated during coarse antenna tuning when transmission is inhibited.
FREQUENCY SELECTOR/ INDICATOR	Six digiswitches, each with an associated numerical indicator, which are used to select the desired frequency. The extreme left hard selector has three positions (0, 1, 2); on the other selector digits from 0 to 9 are available.
SQUELCH SWITCH	A two-position toggle switch labelled SQL/OFF. Selection to SQL results in a reduction of the received noise level
CHANNEL STORE CONTROL	A push button switch labelled STORE which shall be rotated clockwise before it can be depressed. When released, the switch returns to its original position. It is operated to store the frequency selected by the frequency selector into the channel close at the channel selector.
CHANNEL SELECTOR	A twelve-position rotary switch labelled CHAN with positions marked M and 1 to 11. It selects one of the eleven preset channel or, at position M, the frequency set by the Frequency Selector.

POWER SWITCH	A two-position rotary switch labelled ON/OFF which controls the power supply to the equipment.
TEST SWICH INDICATOR	A combined push button and green indicator labelled TEST. When depressed and released the equipment interruptive BITE circuits are activated and the incorporated indicators illuminates for about one second to indicate that the test has been performed.
FAIL INDICATOR	An amber indicator labelled FAIL which illuminates if the continuous or interruptive BITE check detects an equipment failure.

HF/SSB Radio Operation

WARNING

EXTREME CAUTION SHOULD BE USED WHEN OPERATING HF/SSB ON THE GROUND DUE TO THE HIGH ENERGY RADIATED.

If a frequency already stored is required, set the channel selector to the required channel and set the power switch to "ON". Reception facilities are available upon switching the equipment on. Set the communications control panel HF volume control to give the required audio level. When the antenna is tuned, the TUNE indicator goes out. If the required frequency is not stored, set the channel selector to "M" and set the required frequency via the frequency selectors and then produce as above.

CAUTION

OPERATION OF THE POWER AMPLIFIER IMPOSES CONTINUOUS OPERATING TIME LIMIT OF 10 MINUTES IN THE TRANSMIT MODE. THE DUTY CYCLE IS 10 MINUTES TRANSMIT/10 MINUTES RECEIVE.

Channel Loading

Channel loading is carried out as follows. Set the channel selector to the channel to be loaded, the TUNE indicator illuminates indicating that the antenna is being tuned to the frequency already stored. Set the frequency selector to the frequency to be stored. When the TUNE indicator extinguishes, rotate the STORE push-button clockwise; depress and then release the push-button. The TUNE indicator illuminates indicating that the antenna is being coarse tuned to the newly stored frequency.

HF/SSB Bite

A BITE check is integrated in the HF/SSB radio. The BITE is activated by depressing and then releasing the TEST switch/indicator which illuminates to indicate that a test has been performed. Failures are indicated via the FAIL indicator. In order that correct matching of the system can be checked, transmission is necessary to test the functions. Therefore, operate a PTT and then the TEST push-button.

GROUNDCREW I/C CONNECTOR

Groundcrew cockpit communication is provided by a groundcrew connector. The connector is located on the right hand main landing gear compartment. Power is taken from the 28V DC busbars.

I/C Operation

After the groundcrew headset connector is connected to the I/C connector, communication from groundcrew to aircrew can be established by pressing the PTS button on the groundcrew headset. For communication from the aircrew to the groundcrew the CALL switch on the CCS panel shall be activated.

TELEBRIEFING CONNECTOR

The telebriefing connector provides landline communication between ground controller and aircrew. The connector is mounted to the right hand main landing gear strut. When a telebriefing landline is connected, the groundcrew communication is suspended and optical indication is displayed on both CCS control panels to the aircrew.
To establish contact with the ground controller each aircrew member can activate the TELEBRIEF push-button on the relevant CCS control panel. During ground emergencies the telebriefing mode may be overridden by pressing the PTS-button of a groundcrew headset.

PRESS TO TRANSMIT CONTROLS

Miscellaneous Switch Panel, PTT Switch

The miscellaneous switch panel contains a switch for activating transmissions. The panel contains a toggle switch marked TRANSMIT/OFF. When held from the spring-loaded OFF position to TRANSMIT the transmissions can be made on V/UHF and UHF emergency.

Control Stick PTT Button

The control stick in the front cockpit contains a PTT button for transmitting.

Throttle PTT Button

The throttle lever in the front cockpit contains a PTT button for transmitting.

RECORDERS

The following recording facilities are installed in the aircraft:

- Cockpit Voice Recorder (CVR)
- Head-up display camera (HUD)
- Head-down display recorder (HDDR)
- Crash recorder (CR)

COCKPIT VOICE RECORDER (CVR)

The CVR provides a two-track data entry facility and operates as an audio flight log for the pilot and the navigator. It is installed in the rear cockpit. The rapid data entry (RDE) facility enables replay of the pre-recorded serial digital data signals, and their reconstitution into a form suitable input to the MC. When operating as a flight log, the CVR is capable of recording and replaying all audio signals. A fully loaded cassette allows 20 minutes of recording time.
The CVR operates from the PP2 DC busbar.

CVR CONTROL SETTING

MODE SELECTOR	MASTER SWITCH	VOICE RECORDER SWITCH (PHC PANEL)	TAPE DRIVE SWITCH			CVR RECORD INDICATOR (PHC PANEL)	TAPE POSITION INDICATOR (REFERENCE TO NORM)
			REV	NORM	FWD		
MAN	STBY	STOP	Not selectable		Not selectable	Exstinguished	Does not move
	START	START STOP	Not selectable	Continuous audio record with erase-before-record	Not selectable	Illuminated	Advances with a rate of one digit per two seconds
AUTO	STBY	STOP	Not selectable		Not selectable	Extinguished	Does not move
	START	START STOP	Not selectable	Automatic audio record with erase-before-record	Not selectable	Illuminated when audio is present	Advances with a rate of one digit per two seconds
REPLAY	STBY	Inoperative	Fast rewind		Fast forward	Extinguished	Does not move
	START		Fast rewind	Continuous audio replay	Fast forward		Advances with a rate of one digit per two seconds
DATA ENTRY	STBY	Inoperative	Fast rewind		Fast forward	Extinguished	
	START		Fast rewind	Continuous data replay	Fast forward		Advances with a rate of one digit per seconds

CVR Control Panel

The cockpit voice recorder control functions are as follows:

MASTER SWITCH (START/STBY/OFF)
A three-position toggle switch with the following positions:

OFF	Power supply is shut-off
STBY	Power is on, tape transport is inhibited except for reverse or forward spooling.
START	Power is applied for operating the recorder in all modes

MODE SELECTOR SWITCH (DATA/ENTRY/REPLAY/MAN/AUTO)
A four-position rotary switch, with the following positions:

DATA ENTRY	Provides for entering pre-recorder mission data into the main computer.
REPLAY	Replays previously recorded audio signals in setting MAN or AUTO
MAN	Allows continuous recording
AUTO	Records automatically when an audio signal is sensed by the voice actuated switch in the CVR

NOTE

To select the data entry facility, the mode selector switch is pressed, then turned.

TAPE DRIVE SWITCH (REV/NORM/FWD)
A three-position slide switch, spring-loaded to NORM position. When in this setting tape transport speed is normal for REPLAY, MAN, or AUTO modes. In the DATA ENTRY mode transport speed is nearly twice as fast as in NORM setting. In STBY the tape remains stationary until START is selected.
When in REV, fast rewind is accomplished; in this setting MAN and AUTO is inhibited. When in FWD fast forward transport is accomplished; other functions are the same as for REV.

TAPE POSITION INDICATOR
A three-digit counter indicating from 000 to 999.

NOTE

The counter is automatically reset to zero when a cassette is removed from the recorder unit.

Voice Recorder Indicator (RUN)

An indicator illuminates green when (only in the MAN or AUTO mode) the tape is running.

Voice Recorder Switch (START/STOP)

A two-position toggle switch enables the pilot to activate the cockpit voice recorder in the recording modes when STBY is selected on the CVR control panel.

Front Cockpit Hand Controller Panel

Integrated into the front cockpit hand controller panel, is the cockpit voice recorder control for the pilot. Operation of the voice recorder in the front cockpit is limited to two controls on the hand controller panel.

CVR OPERATION

NOTE for Microsoft Flight Simulator:

CVR controls are can be operated, but CVR is not emulated in the game except for Rapid Data Entry (RDE) – which is mandatory to load the flight plan if the flight starts with the plane "Cold and Dry"

For recording, the toggle switch shall be set to START position. Each crewmember can select the notebook by pressing the CVR pushbutton on the CCE panel. The pilot's voice is normally recorded on tape track 1, the navigator's voice on tape track 2. The end of a cassette is indicated on the tape counter at a display of approx. 940. For replay, set the mode selector to REPLAY with the master switch set to STBY or START. Use the FWD or REV position on the tape drive switch to bring the tape to a particular position. Select TRK 1 or TRK 2 on the CCS control panel as required. Adjust the CVR volume control on the CCS control panel as required.
To enter pre-recorded data from a cassette into the MC with mission data, ensure that the master switch is set to OFF, mode selector to REPLAY and pilot's voice recorder switch on the pilot's hand controller panel to

STOP.
Set up main computer and TV/TAB to accept and display rapid data entry from the cockpit voice recorder.
Install pre-recorded cassette into CVR and ensure tape position indicator is at 000.
Select master switch to STBY, observe tape position indicator and hold tape drive switch to REV. When tape position indicator. stops- decrementing, return tape drive switch to NORM. Select mode selector to DATA ENTRY.
Select master switch to START and check that tape position indicator increments, and that TV/TAB display is cleared automatically for data insertion. Observe TV/TAB display and ensure, after approximately 10 seconds, that RDE COMPLETE is displayed. Return master switch on CVR panel to STBY.
To install a cassette into the CVR proceed as follows:
Ensure that on the CVR panel the master switch is placed to OFF, and the mode selector switch is placed to REPLAY. Set VOICE RECORDER switch on the pilot's hand controller panel to STOP. Open recorder unit lid by moving handle to upright position, then move the exposed unit to the rest position. Insert cassette. Push unit home and lock handle.
To remove a cassette from the CVR proceed in reverse sequence.

CAUTION
DO NOT ATTEMPT TO MOVE TAPE DRIVE SWITCH FROM NORM (MECHANICALLY LOCK IN) UNLESS A CASSETTE IS INSTALLED, OR DAMAGE WILL OCCUR.

TO AVOID MAGNETIC HEAD OR TAPE CONTAMINATION:
- KEEP THE RECORDER UNIT LID CLOSED
- KEEP THE CASSETTE INSIDE A PLASTIC CON TAINER WHEN NOT IN USE
- DO NOT TOUCH THE EXPOSED TAPE

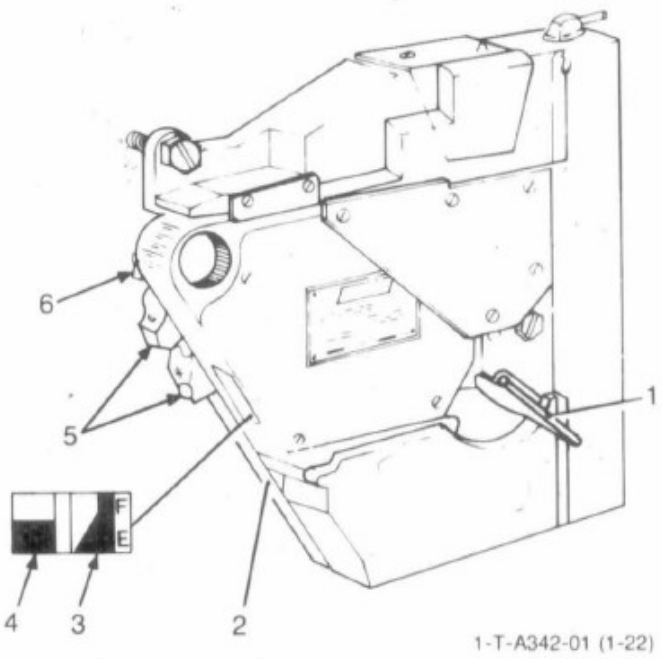

1 Cassette locking lever
2 Cassette locked indicator
3 Film supply indicator
4 Film running indicator
5 Frame rate selector
6 Manual single frame button

HEAD-UP DISPLAY CAMERA (HUD CAMERA)

The HUD camera records images of HUD symbology superimposed on a view of the outside world as seen by the pilot through the HUD pilot's display unit (PDU).
The HUD camera is installed on the right side of the head-up display unit in the front cockpit. The camera is controlled by settings on the camera control panel, and can be initiated manually through the pilot's control stick camera button, or automatically by signals form the MC. A manual single shot (SS) facility is also provided on the camera. The camera can be loaded with 16 mm standard film or with special thin film.
A standard film cassette gives a running time of 2 minutes at 16 frames per second or 1 minute at 32 frames per second. When thin film is loaded, the running times are increased to 3 minutes or 1,5 minutes respectively. Film running and film remaining and indicators are embodied into the rear side of the cassette.
The camera is supplied by the PP2 DC busbar.

NOTE for Microsoft Flight Simulator:

Head-up display camera is not implemented in this MSFS rendition.

HUD Camera Controls

The HUD camera controls are shown in figure.

CASSETTE LOCKING LEVER
The locking lever, located on the right side of the camera, is used to lock or unlock the cassette during loading/unloading.

CASSETTE LOCKED INDICATOR
The indicator is coupled with the cassette locking lever and appears as a white bar beneath the camera body when the cassette is properly locked in position in the camera.

FILM SUPPLY INDICATOR
This is a drum type indicator captioned F (empty) and F (full) and indicates the amount of unexposed film remaining in the cassette.

FILM RUNNING INDICATOR
The running indicator is of the drum type marked with black and white segments. When the drum rotates it indicates that film is running through the camera.

FRAME RATE SELECTOR
The selector consists of two interlinked push buttons. The upper button is marked 16 and when pressed, sets the frame rate at 16 FPS. The lower button is marked 32 and sets the frame rate at 32 FPS.

MANUAL SINGLE FRAME BUTTON
This button, captioned SS (single shot), is located on the camera above the frame rate selector buttons. When pressed and released, it will expose one frame of the film.

HUD Camera Control Panel

The control panel is shown in figure.

MASTER SWITCH
The master switch with the captions MASTER ON/OFF controls the 28V DC power supply to the camera.

OVERRUN SELECTOR SWITCH
The overrun selector switch is captioned OVERRUN (SEC), and has seven positions marked 0, 1, 2, 3, 10, 15 and 30. These positions function during manual camera operation only, and when a setting between 1 and 30 is selected, will allow the camera to run on for the set time in seconds after release of the camera button on the pilot's control stick.

PANEL LIGHTING
The legends on the control panel are illuminated by an electroluminescent panel. The intensity of the lighting can be adjusted through the cockpit dimmer system.

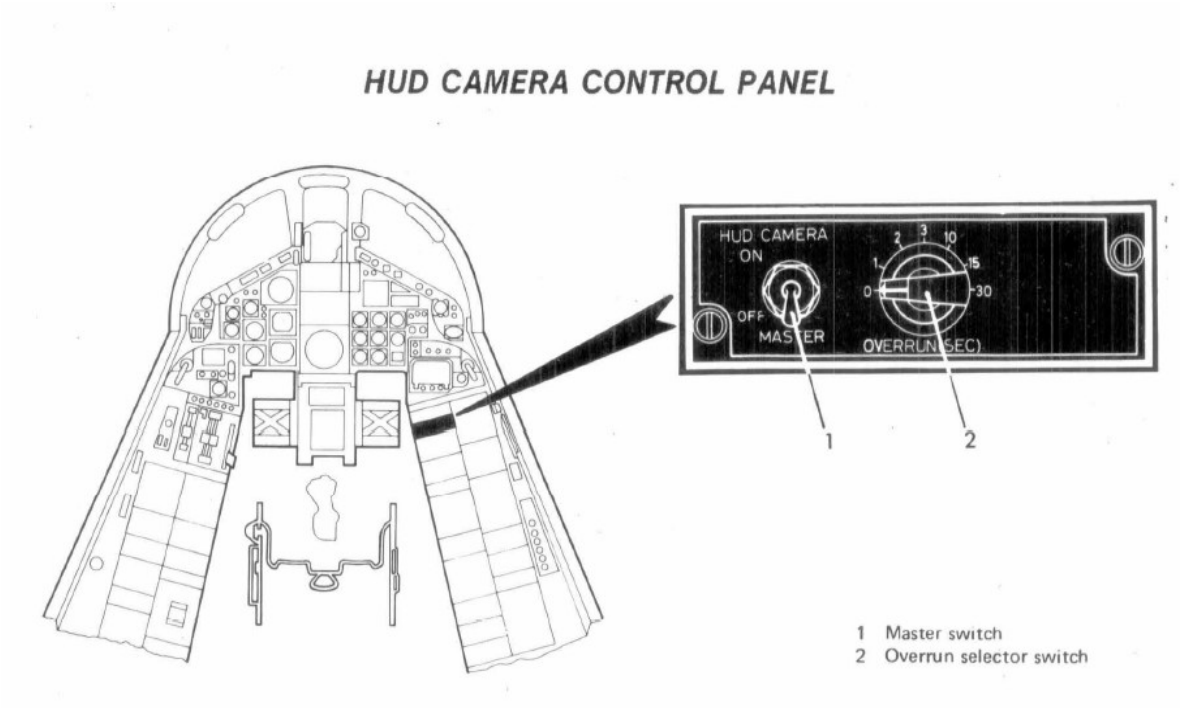

HUD Camera Operation MANUAL OPERATION

MANUAL OPERATION
Control of the camera is exercised from the control panel. With Hie MASTER switch set to ON, the desired frame rate selected, and the OVERRUN switch set as required, the HUD camera will operate when the camera button on the pilot's control stick is depressed. On release of the camera button, the camera will continue to run for the number of seconds selected on the OVERRUN switch.
Single shot operation is achieved by depressing the SS button on the camera body.
AUTOMATIC OPERATION
With the MASTER switch set to ON, the desired frame rate selected, and the OVERRUN switch set to the 0 position, the camera operation will be initiated by command signals generated by the MC at:

- Selection of phase 2 during an attack with bombs
- Selection of WRB or ARB
- Selection of TOO
- Pressing of gun trigger in AGG and AAO

The camera run signal is inhibited 2 seconds after weapon release.
On receipt of a weapon release signal from the SMS, a dot is imposed on the bottom left hand corner of the relevant film frame to provide an event marker.

HUD Camera Cassette Loading

Ensure that the cassette is full by checking that the "Film Remaining" indicator is registered at the "F" mark.
Hold the cassette in the right hand, position aft of the camera body.
Feed the cassette forward into the cassette aperture of the camera body so that it engages the cassette guide.
Push the cassette firmly and steadily forward as far as it will go.
Turn the cassette latching lever to the locked position.

NOTE

The locking lever will turn only when the film cassette is positioned fully forward into its loaded position. After the film cassette is properly inserted and locked, the white indicating bar should appear.

Cassette Unloading

Turn the cassette latching lever to the unlocked position.

Insert the right hand index finger into the lug at the top of the cassette and pull the cassette firmly aft until the resistance of the safety catch is felt.
Grip the cassette in the right hand and apply a slight downward pressure to clear the safety catch, then pull the cassette clear of the camera body.

HEAD DOWN DISPLAY RECORDER (HDDR)

NOTE for Microsoft Flight Simulator:

HDDR is not implemented in this MSFS rendition.

The HDDR equipment provides facilities for a film record of:

- Ground Mapping Radar video and symbols from the CRPMI)
- DU-1/DU-2 video display (TV/TAB 1/2)

The HDDR system consists of a camera/CRT unit, an electronics unit and a control panel.
Except for the control panel, the electronic control unit and camera/CRT unit is remotely controlled and without external setting controls.
The recording camera is loaded with a 16 mm film cassette.
Running time at a frame rate of one per second is approximately

RADAR SCALE MARKERS

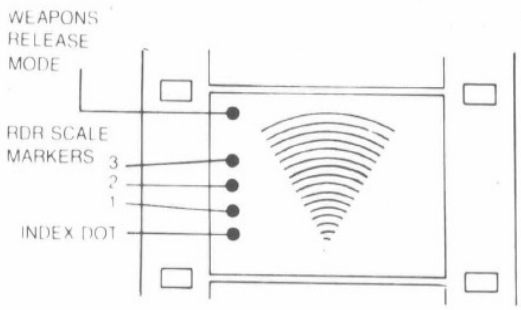

RADAR SCALE	2	4	10	20	40	80
INDEX MARKER	●	●	●	●	●	●
1ST MARKER	●		●		●	
2ND MARKER		●	●			●
3RD MARKER				●	●	●

33 minutes.
The electronic unit and the camera/CRT unit operate with 115V and with 28V DC. The control panel is supplied with 28V DC. A continuous (automatic) BITE facility is incorporated into the recording system.

Radar Scale Marking

Three Light Emitting Diodes (LED) in the camera/CRT unit are used to indicate on the film the radar scale currently in use during radar mode operations. Each LED light emission causes a dot to be recorded on the film. A fourth LED is continuously emitting whenever the HDDR is recording in a radar mode and provides a reference index on the film to mark radar scale position. A fifth LED, driven by a weapon release signal from the MC, records weapon release events on the film. A radar scale table is shown in figure.

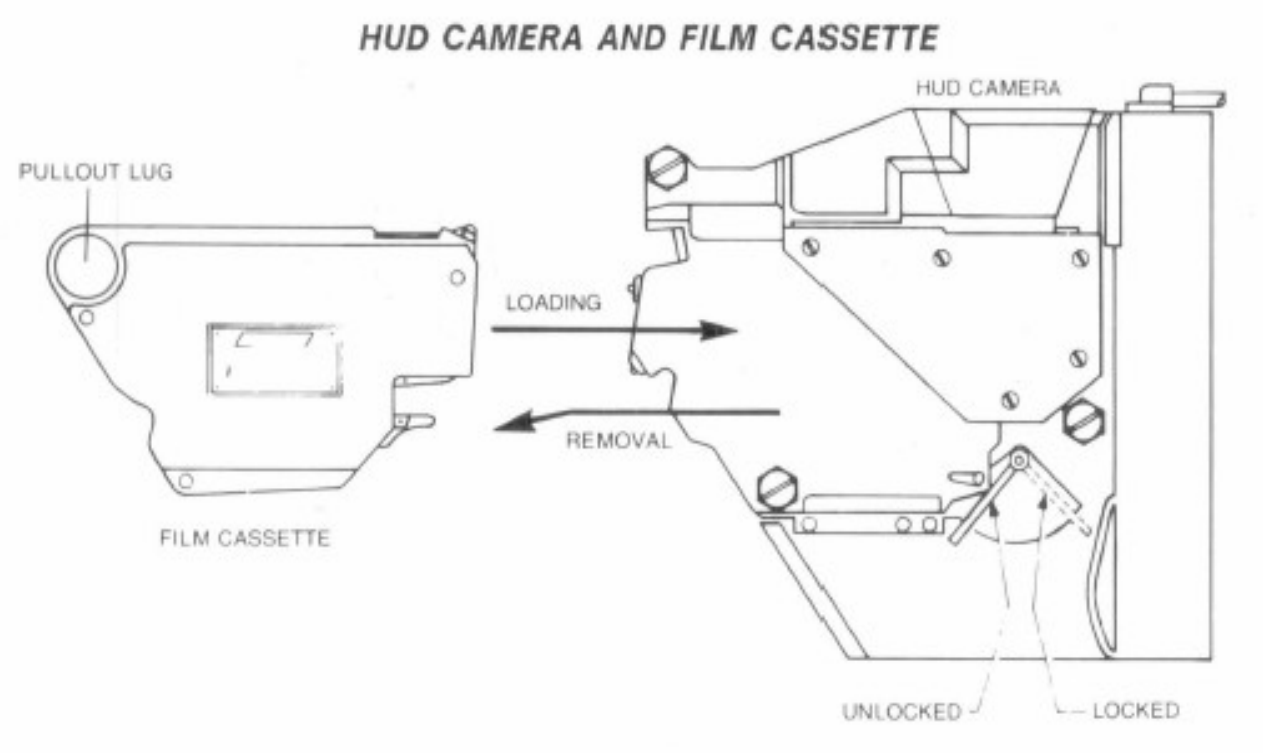

Figure 1-48

HDDR Control Panel

The HDDR control panel and its controls are shown in figure.

FILM REMAINING INDICATOR
(Not operative)
Post mod. 10841
Film remaining indicator deleted.

FRAME RATE SELECTOR
A three-position toggle switch labelled FRPS controls the film frame rate when recording TV/TAB 1/2 information only. Position 1, 2 and 4 select frame rates of one, two and four frames per second respectively.

FAIL-I/P FAIL INDICATOR
The FAIL-I/P FAIL indicator is a split amber caption indicator labelled FAIL-I/P FAIL.
The upper FAIL caption illuminates amber when the BITE function has detected a fault, in the case of film breakage, or at the end of film.
The lower I/P FAIL (Input Fail) caption illuminates amber if:

- A RDR/DU2 sequence has been selected but end-of-scan pulses fail to appear.
- A DU 1/DU2 sequence has been selected but "sync" pulses fail to appear.

NOTE

If a HOJ, TA, AGR, or LCK ON mode on the CRPMD is selected, since the end-of-scan pulses are absent, the HDDR will automatically generate its own pulses of 1 sec., but the I/P FAIL caption will remain

illuminated.

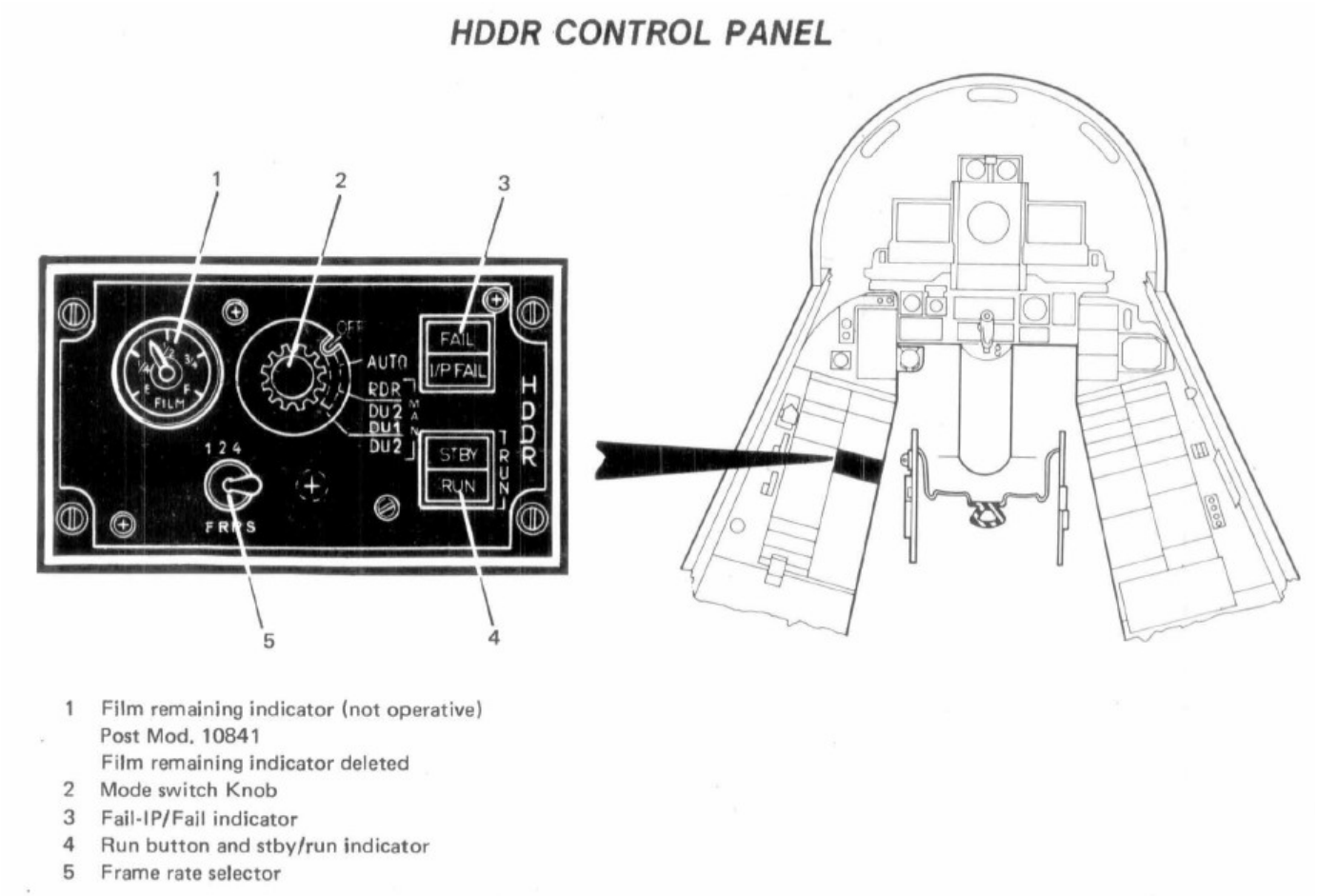

Figure 1-50

MODE SWITCH KNOB
A rotary switch which has the following positions:

- OFF
- AUTO
- RDR/DU2
- DU1/DU2

In the OFF position, all electrical power to the HDDR is disconnected.
A BITE test will be initiated whenever the mode switch is moved from the OFF position.
In the AUTO position, electrical power supplies are connected to the HDDR circuits, and the manual RUN circuit is inhibited. The STBY indicator will illuminate for a 75 sec. warm-up period and will extinguish at the end of this period unless the BITE test has detected a fault. The HDDR will now operate automatically from command signals generated by the MC during certain phases in navigation and attack modes. The MC will initiate these recording sequences according to radar mode, keyboard selections and weapon selections. Three frames from each commanded source will be recorded as follows:

- During phase 1 of a planned or unplanned attack with LCK-ON or HOJ selected, radar only is recorded.
- During phase 1 or phase 2 of an unplanned attack with PLN or NAV selected on the TV/TAB, radar only is recorded.
- During phase 1 and phase 2 or a planned or unplanned attack, with F/A selected on the TV/TAB, radar and DU1 or DU2 will be recorded. LCK-ON and HOJ not selected.

In the MAN-RDR/DU2 position, the STBY indicator will illuminate and after a 75 sec. warm-up period, it will extinguish, provided that no fault has been detected by the BITE test.
Radar-DU2 sequence may then be initiated by pressing the RUN switch.
The HDDR will switch from radar recordings to DU2 recordings at three frame intervals. This sequence will continue until cancelled by second pressure on the RUN-button.
In the DU1/DU2 position, the STBY indicator will illuminate and after the normal 75 sec warm-up period it will

extinguish, provided that no fault has been detected by the BITE test, DU l/DU2 recording sequences may than be initiated by pressing the RUN switch. The HDDR will switch from DU1 to DU2 recordings at three-frame intervals. This sequence will continue until cancelled by second pressure on the RUN switch.

RUN BUTTON AND STBY/RUN INDICATOR
The button/indicator is a press-to-start/press-to-stop switch incorporating the split legend STBY/RUN indication. The RUN caption will illuminate green when the switch is depressed and initiates HDDR recording operations, provided that the STBY and FAIL indications are extinguished, and the mode switch is in one of the MAN positions. Second press on the button will terminate recording operations.
If, on initialing a HDDR operation, the RUN button is depressed twice in rapid succession a complete sequence from both sources will be recorded, at the completion of which the recording operation will be terminated automatically.

NOTE

The STBY caption illuminates amber when the HDDR is in the warm-up period. If, subsequent to this period it remains illuminated together with the FAIL indication, it indicates that the BITE test has detected a failure.

PANEL LIGHTING
The legends on the control panel are illuminated by an electroluminescent panel. The intensity of the lighting can be adjusted through the cockpit dimmer system.

HDDR Operation

Operation of the remotely installed HDDR is affected from the control panel. Setting the mode switch from OFF to the required recording mode activates the HDDR. The STBY indicator light on the control panel will illuminate for approx. 75 seconds after initial turn-on, then extinguishes. To record in the manual mode, the mode switch is set to either RDR/DU2 or DU1/DU2, the frame rate switch to the desired setting (1, 2, or 4 FPS), and the RUN button depressed.
To stop manual operation the RUN button is pressed again.

NOTE

After pressing the RUN button, a second time to stop manual recording, the HDD recording camera will complete the current recording cycle before it terminates operation.

To record in the automatic mode, the mode switch is set to AUTO and the recording cycles will be initiated by the main computer. While taking radar frames, the frame rate will be controlled by the radar end-of-scan pulses.

HDDR Cassette Loading

To load a new cassette into the Camera/CRT Unit: Ensure that the film indicator shows that the cassette contains the full amount of film. Depress the catch to release the magazine cover. Insert the cassette into the magazine, close the magazine cover.

Cassette Unloading

To unload a cassette from the Camera/CRT unit: Depress the catch to release the magazine cover. Withdraw the cassette and place it in a suitable container. Close the magazine cover.

CRASH RECORDER

The crash recorder (CR) system is an independent device designed to monitor, condition and record signals from certain aircraft systems. Specific parameters and events are recorded on tape in digital form. In addition, a direct audio record is made from the aircraft's CCE.
The data recorded on the CR may be used for analysis following a crash or major incident.
The CR is located in the upper fuselage spine.

Crash Recorder Equipment

The system comprises the following units:

- Data Acquisition Unit (DAU)
- Accident Data Recorder (ADR)
- Normal Acceleration Unit (NAU)

The 115V, 400 Hz single-phase supply and 28V DC are routed respectively from bus-bar XP3 and bus-bar

PP3.

- The DAU receives, selects and conditions the various parameters to be recorded, converts these parameters into digital format and transmit them to the ADR in the correct sequence and in the correct recording format.
- The purpose of the ADR is to make a direct record of audio signals present in the CCE and to provide a digital record of specified parameters and events occurring during flight. The audio record is of the preceding 40 minutes flying time and the digital record is of the preceding 120 minutes.
- The NAU detects aircraft accelerations in the normal (vertical) axis and provide signals to the ADR proportional to these accelerations.

Controls and Indicators

The crash recorder controls comprise the following element: ENGINE START SWITCH.
The ENGINE START switch on the engine start panel will activate the CR when selected to LEFT or RIGHT.

CR Operation

The CR equipment is brought to the standby operating condition when the electrical power supply is applied to the aircraft. The equipment becomes operational when the engine start switch is set to left or right or when the weight is off the aircraft wheels.

SECTION II
NORMAL PROCEDURES

NOTE for Microsoft Flight Simulator:

In this Microsoft Flight Simulator product, a lot of effort has been spent to emulate the behavior of most of the real-world aircraft systems and procedures, some (small) deviations and artistic licenses are present and the procedures in this chapter have been (slightly) modified for the simulation and may not apply to the real aircraft.

PREPARATION FOR FLIGHT

FLIGHT RESTRICTIONS

The flight model of the aircraft has been tuned to represent a Drag Index 0 (DI 0) configuration, and will therefore exceed the performance of the real-aircraft in most configurations, although some real-world limitations have been enforced.
Negative G force or excessive G force with flaps extended will damage the flaps.
Excessive G forces may cause structural damage.

NOTE for Microsoft Flight Simulator:

The drag in the simulated aircraft has been tuned to reflect a DI 0 configuration, that is a clean aircraft with no extenal loads and no pylons. Please keep in mind that in MSFS drag is not dynamic and will not change depening on the loadout so the overall aircraft performance in the simulation will exceed, in many cases, the performance of the real world aircraft. For information, the default configuration of the sim (2 BOZ + 2 AIM-9 + 2 underwing tanks) will produce a DI of 48.

The simulated aircraft can fly at slightly higher altutude than the real one.

The expected maximum speeds are as follows (approximate – actual speed depend on the weight):

	In game	Real world DI 0	Real world DI 20	Real world DI 40
Sea level (dry)	M0,95	M0,95	M0,91	M0,87
Sea level (combat)	M1,15	M1,15	M1,08	M1,03
High altitude (dry)	M0,97	M0,95 (20000 ft)	M0,93 (15000 ft)	M0,89 (15000 ft)
High altitude (combat)	M1,75 (28000 ft)	M1.85 (35000 ft)	M1,63 (35000 ft)	M1,25 (30000 ft)

FLIGHT PLANNING

Flight planning must be done prior to the entering the flight by using the simulator flight planner.

NOTE for Microsoft Flight Simulator:

In-cockpit creation or modification of the flight plan is NOT supported in the initial relase. If the plane is started cold and dark, Rapid Data Entry procedure must be followed.

WEIGHT AND BALANCE

Weight and balance are subject to similar restrictions as the real-world aircraft.

NOTE for Microsoft Flight Simulator:

Aircraft drag is NOT affected by the external loads, although weight will change.

PRE FLIGHT CHECKS

INITIAL CHECKS

Front Cockpit

1. Canopy accumulator pressure — 150 bar min
2. Ejection seat and canopy — Safe for parking
   The aircraft is safe for parking when safety pins are inserted in the ejection seat firing handles, the canopy jettison initiator unit, and the canopy MDC initiator units.
3. Crash bar — Aft
4. Voice recorder — STOP
5. Flaps and wing sweep levers and probe switch — Set to actual positions.
6. APU power switch — As required (Post mod. 00011)
7. Throttles — HP SHUT
8. X-drive clutch — OPEN

NOTE

The X-drive clutch should be in OPEN position prior to APU start for load reduction thus preventing possible APU first stage turbine disk failure.

9. Landing gear lever — DOWN
10. LP cocks — Guarded.
11. MASS — LOCK SAFE, green flag, key available
12. Late arm — Guarded.
13. Control column switches — Guarded.
14. Hydraulics — Both AUTO
15. Brake handle — Park
16. Air system master — As required.
17. TF radar — OFF
18. Rapid take-off panel — Gang bar up. W/SCREEN HEATER and PITOT HEATERS OFF

NOTE

Prior to checking relights, confirm that both throttles are in HP SHUT to avoid the risk of an engine ground fire, if the APU is running.

19. Relights — Check
20. Ignition (Engine control panel) — OFF
21. Generators — Both OFF, FAIL lights on
22. APU auto test — TEST, APU caption on CWP
23. Nav. lights — As required.
24. Emerg. UHF — ON, channel set
25. Connect external power or start APU (Prolonged Operation)

NOTE

AC power shall be online as soon as possible after the battery master switch is set to FLIGHT to ensure that the ground cooling fans are operating. If AC power is not online within two minutes of battery selection, a warning horn in the right landing gear bay sounds.

Rear Cockpit

NOTE for Microsoft Flight Simulator:

This and other rea-cockpit checklists can be perfomed automatically by selecting the relevant option in the WSO CHECKLISTS

1. Ejection seat and canopy — Safe for parking
2. Attack release — Guarded.
3. WCP1 — Jettison guarded, lights out.
4. TR switch (TRAINER) – FRONT

5. LP cocks (TRAINER) - Guarded
6. CRPMD - OFF
7. MC control panel - All OFF
8. INCDU - OFF
9. SAHR - OFF
10. Doppler - OFF
11. V/UHF – T/R + G
12. CCS - As required, ANT UPPER, CVR button out.
13. Voltmeter (Post Mod. 01662) - Check battery voltage 25 to 27V
14. Inform pilot clear for external power or APU start.

EXTERNAL CHECKS

The exterior inspections are divided into four main areas (Figure 2-1).
The entire area around the airplane as well as engine air intakes, bleed doors, ECS cooling intakes and exhausts, and afterburner ducts should be generally examined for FOD.
All surfaces should be checked for cracks, distortion, or loose or missing fasteners. All fasteners should be flush and secure on all panels.
Attention should be directed to surfaces, lines and actuators for oil, fuel and hydraulics leaks.
All movable surfaces should be inspected for position, clearance and obvious damage.
Air intakes clear of water puddles. Ground locks and pins shall be removed.

NOTE for Microsoft Flight Simulator:

Exterior checks obviously do not apply to MSFS – this paragraph is for information only.

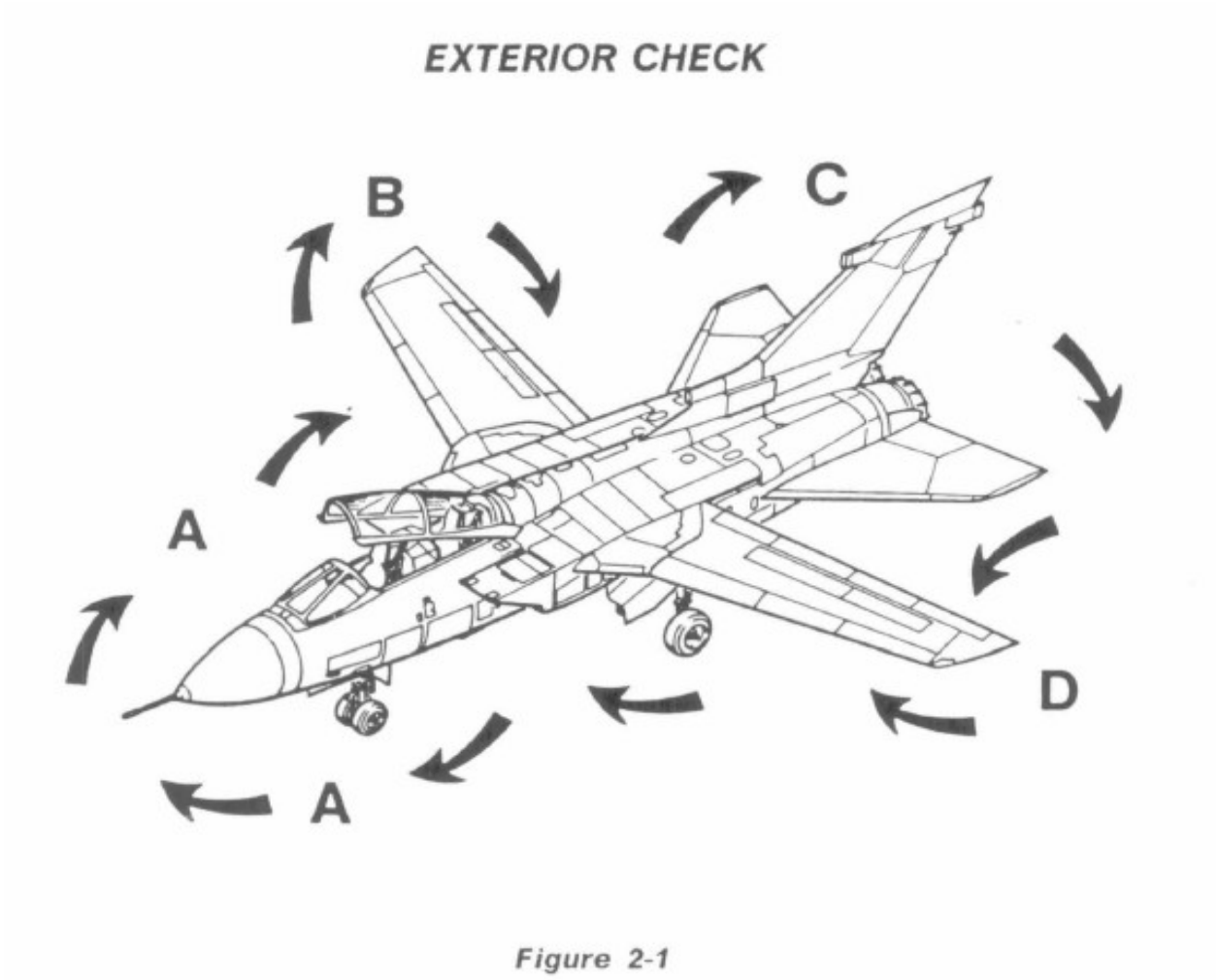

Figure 2-1

Nose

1. WPU - Check
2. Accumulator pressure:
   Canopy - 150 bar minimum.
   Brakes - 150 bar minimum.
   Pitch feel (2) - 53 bar minimum
3. Canopy external controls - Secure
4. Pitot probe - Cover removed, condition.
5. Static vents (3) - Plug removed.
6. Nosewheel and leg assembly - Check tire, oleo and general condition
7. Nosewheel bay - c/b covers as required.
8. Canopy jettison/MDC firing handle - Secure
9. AOA probe - Cover removed, condition.
10. UHF/TACAN aerial - Condition
11. Upper IFF aerial - Condition
12. Hinged nose cone - Condition, locked.
13. Pitot probe - Cover removed, condition.
14. AOA probe - Cover removed, condition.
15. Static vents (4) - Plugs removed.
16. Pitot probe - Cover removed, condition.
17. Intake and ramp - Fully open, condition
18. Nav. and a/coll. lights – Condition

Centre Fuselage and Wing

1. Krueger flap - Condition
2. Landing gear door safety switch – CLOSED and wire locked.
3. Battery switch (Refuel panel) - ON.
4. Fire bottle fuse indicators - Not red
5. RCOV - INT

CAUTION

IF THE L AND R RECIRCULATION CHANGEOVER VALVES ON THE GROUND SERVICE FUEL PANEL DO NOT SHOW INT, THE APU SHALL NOT BE STARTED.
IF ALREADY RUNNING IT SHALL BE SHUT WITHOUT DELAY TO AVOID THERMAL LOCK AND POSSIBLE FUEL FEED LINE RUPTURE.

6. APU switch - Guarded.
7. Mainwheel and leg - Check tire, brake wear, oleo and general condition
8. Slats - Condition
9. Obst and form lights - Condition
10. Flaps - Condition
11. Wing slot seals - Condition

Aft Fuselage

1. Hydraulic gauge - Contents
2. Fire extinguisher pressure relief indicator -White
3. Airbrake - Condition
4. Taileron - Condition
5. Main accumulator pressure - 140 bar minimum.
6. Jet pipes and thrust reversers - Condition.
7. Engine bay doors - Closed.
8. Lower IFF aerial - Condition
9. Fin and rudder - Condition, rudder centered.
10. Arresting hook - Condition, pin removed.

Left Fuselage/Wing

1. Main accumulator pressure - 140 bar minimum.
2. Taileron - Condition
3. Airbrake - Condition

4. Hydraulic gauge - Contents
5. Wing slot seals - Condition
6. Flaps - Condition
7. Obst and form lights - Condition
8. Slats - Condition
9. Mainwheel and leg - Check tire, brakewear, oleo and general condition
10. Nav. and a/coll. lights - Condition
11. Krueger flap - Condition
12. Intake and ramp - Fully open, condition

EJECTION SEAT CHECKS

1. Safety pin - In
2. Manual separation handle - Secured, scar connected.
3. Trip rods - Secured.
4. Harness and strap - Correctly routed and secured.
5. Scissor shackle - Closed, locked, laid flat.
6. Parachute pack - Closed, secured, safety ties intact.
7. Seat top latch - Flush
8. Drogue withdrawal line - Secured.
9. MDC unit - Trip rod secured
10. Emergency oxygen gauge - Contents (green mark)
11. Emergency oxygen operating handle - In position
12. PSP lowering line - Connected, sticker clip secure
13. Quick disconnect unit - Secured.

STRAP IN PROCEDURE

The following procedure may be used:

WARNING

IT IS IMPERATIVE THAT THE FLIGHT SUIT LOWER LEG SIDE POCKETS ARE KEPT EMPTY SINCE ANY OBJECTS STOWED MAY DISTURB EJECTION.

1. Pitch control unit - Dial weight (Post mod. 00996: Pitch control unit is deleted)
2. Seat height - Adjust.

CAUTION

CHECK QRB PROPERLY STOWED BEFORE OPERATING THE SEAT TO PREVENT DAMAGE TO THE SEAT.

3. Leg restraint lines - Fit and adjust.

WARNING

THE LEG RESTRAINT LINES SHALL BE FITTED TO PREVENT LEGS FROM FLAILING DURING THE EJECTION. CHECK THAT THE LEG RESTRAINT LINES ARE ROUTED CORRECTLY THROUGH THE GARTERS AS OTHERWISE SERIOUS INJURY - COULD RESULT DURING EJECTION.

4. Rudder pedals - Adjust.
5. Combined harness - Fasten.

Lock inertia reel and fit lap straps and shoulder straps. All hoses and connections routed under lap strap except for anti-g hose. Check QRB showing LOCKED.

WARNING

- THE NEGATIVE G STRAP SGHALL NOT BE ROUTEDTHROUGH THELOWER EJECTION HANDLE.
- THE COMBINED HARNESS SHALL BE FASTENED AS TIGHTLY AS IT 1S COMPATIBLE WITH SAFE AIRCRAFT OPERATION AND COMFORT.

6. Shoulder harness lock – Check operation
7. Arm restraint lines - Connect.

WARNING

THE ARM RESTRAINT LINES SHALL BE FITTED TO PREVENT ARMS FROM FLAILING WHEN EJECTING.

8. Personal service lines — Connect:
   Main oxygen hose (oxygen supply — ON)
   Tel/mic cable

Anti g hose

NOTE

Before closing the canopy ensure that personal equipment leads are secured. Stow jettison initiator safety pin and MDC pins.

9. PEC (man portion) — Check properly fitted.
   a. PSP lowering line — Connected to life vest. The lowering line shall be routed above all hoses and the lap strap.

UNSTRAP PROCEDURE

1. Pilot/navigator — Ensure that seat firing handle safety pins and canopy jettison initiator unit safety pin are installed before canopy operating
2. Arm restraint lines — Disconnect and stow
3. QRB — Release
4. PSP lowering line — Disconnect
5. Leg restraint lines — Release and pull clear
6. MDC pins — Insert

INTERNAL CHECKS — FRONT COCKPIT

1. Ejection seat — Check. Strap in
2. MDC:

Witness marks — Aligned.
Handle — Secure
Pin — Stow.

3. Canopy jettison pin — Stow
4. Oxygen — ON, 100, check MI, AM, test safety pressure, check MI, AM/100 as required.

NOTE

If the aircraft has been cold soaked for a prolonged period under extreme cold temperature, refer to section VII, Cold Weather Procedures

5. V/UHF T/R + G
6. CCS — As required, ANT UPPER
7. APU start:
   Ground crew/navigator — Ready for APU start, fire guard posted.
   A/coll lights — As required.
   APU — START, RUN light flashing.

CAUTION

APU OFF IF NO LIGHT UP WITHIN 15 SEC. THERE IS THE POSSIBILITY OF SERIOUS FIRE HAZARD CAUSED BY FUEL FILLING THE APU EXHAUST DUCT SUFFICIENTLY TO DRIP ONTO THE APU STARTER MOTOR

To minimize stress and thermal load on the APU, start APU with the X-drive clutch set to open followed by 1 minute temperature stabilizing period.

NOTE

- During APU starting, with hot weather conditions (OAT higher than 25°C) and for cold weather conditions (OAT equal or below -10° C); to prevent the risk of an APU overload maintain: X-drive clutch OPEN, R Hyd. and R Gen set to ON. After first engine starting X-drive clutch shall be set to AUTO and L Hyd and I. Gen will be considered.
- APU performance is limited to single gearbox operation only. The APU bleed shall be open to ensure sufficient cooling of the recirculation fuel.
- APU running with tailwind com-ponent greater than 10 kt shall not exceed 10 minutes.
- With APU running, testing of APU fire warning system will cause the APU to shut down.

After 1 minute:

X-drive clutch — AUTO
L and R hyd — 70 to 110 bar
Generators — Both ON, check each generator in turn, both ON, FAIL lights out.

Ensure full serviceability of each generator by monitoring the relevant FAIL light and the GEN/CWP caption. Abort if failure is detected.

CWP — AC, DC, TRU and GEN captions out

8. If APU prolonged operation required:
   X-drive clutch — OPEN
   APU bleed — OPEN, RUN light steady.
   R HYD pressure — 70 to 110 bar.
9. When required to close canopy:
   Left hydraulics — ON, white sector, AUTO MDC/Canopy witness marks — Aligned Mask on, visor down.
   Canopy — Closed and lock.
10. Rad alt — ON
11. ESRRD:
    MODE — TEST
    TFR — NORM
12. HUD — DIR
13. TACAN —T/R
14. IFF — STBY
15. TF radar — STBY, FIXED FREQ

Left Console

1. Jack release handle — Stowed wire intact
2. Canopy jettison handle — Stowed wire intact
3. Emergency airbrake — Guarded
4. Emergency flap — Guarded
5. Anti dazzle — OFF
6. CSAS — Guards down, READY light on
7. AFDS control panel — SCH1500
8. AFDS BITE — Check

ICO	Press	
Pre-flt/ 1st line	AFDS CP:	AP GO lit FD GO lit
BITE pushbutton	PUSH AFDS CP: CWP	COMPTR 1 COMPTR 2 lit Pushbutton flashing (after approx. 90 sec AUTO P AP MON AP TRIM lit.
Pitch SFCO		Operate, CWP lights out. AFDS CP: FD, THROT Operate, CWP lights out. TF lit.
ICO	Press AFDS CP, CWP	 FD, THROT out AUTO P, AP MON, AP TRIM lit
Roll SFCO		Operate, CWP lights out
BITE pushbutton	PUSH,	light out
Pre-flt/ 1st line	Centre AFDS CP:	and guarded. COMPTR 1,

COMPTR 2,
AP GO,
FD GO out.
if no go: ABORT

NOTE

- A successful BITE check of the AP is to be carried out prior to flight. If unsuccessful, one ferry flight, is permissible without use of AP/FD.

- ATTD FAIL lit if SAHR/IN not aligned.

9. Wander lamp — Check, stow.
10. BRSL — Both LOCK, guarded.
11. Throttles — Full and free (do not rock), HP SHUT

Left Quarter Panel

1. Trim gauge - Condition
2. Krueger flaps - MI indicating correct
3. Selective/emergency jettison - As required
4. Emergency landing gear lever - In
5. Flaps/slat, airbrake, wing - Indicating correct
6. Land/taxi lights - OFF

Anti-glare Shields

1. Lift dump indicator - OL
2. TR - NORM, indicators blank
3. Hook light - Out
4. AOA indicator - Flag away
5. HUD camera - Film speed, cassette latched
6. Accelerometer - Reset
7. Approach progress indicator - Blank
8. Clock - Check
9. Standby compass - Condition

Main Instrument Panel

1. Landing gear indicator - 3 greens
2. NWS lights - Out
3. Rad alt - Set bug 50 ft, PRESS TO TEST, check 100 ± 10 ft, cross-check HUD and low height warnings, set bug to zero.
4. AP light - Out
5. Flight instruments - Condition ADI erect, flags away, 1013 set, altimeter RESET.
6. FSRRD - Check test formats, select ES or CR as required.
   HUD - Check test formats and SBS, camera as required, select AUTO and modes as required.
7. RPMD:
   Mode - T, align display, insert.
   PL Test - PI,1 and 1,2 lights on
8. HSI modes - TEST, check altimeter 1250 ft, select TAC, deselect TEST.
9. WAMS lights – Out
10. WCP2 lights - Out
11. V/UHF remote indicator - Check, set dimmer.
12. RWR and STWI - Set
13. Engine instruments - Check, flags away
14. Fuel flow - Zero
    Fuel - Check contents, TEST, zero reading. Press the contents gauge TEST button and check that both pointers indicate zero and return to normal when the button is released. Check that fuel contents are correct, and that the flowmeter reads zero.

Right Quarter Panel

1. EPS - OFF, pin in, light out
2. CWP - TEST 1, TEST 2

- TEST 1 will activate:
  - All CWP captions
  - Attention getters
  - 600 Hz audio alarm
- TEST 2 will activate:
  - All CWP captions (and Post mod, 00629: amber ICE), except amber L/R VIB
  - Front/rear attention getters and lyre bird
  - Engine compartment fire warning system, including fire extinguisher lamps
  - LG selector lever flashing

  Indications R/C:
  - CWP captions CABIN, U/C, L/R FIRE, amber FUEL (trainer), Post mod. 10229: red FUEL

3. Brakes pressure gauge - ACC press 150 bar minimum

Right Console

1. TACAN - TEST, REC
   X/Y switch - X
   BIT button - Press GO MI, range 000.0 and bearing 360 cross check BDHI/HSI
2. HSI mode selector - As required
3. HUD camera - ON, OVERRUN set
4. TBT - DATUM
5. Eng control - Both LANE 1
6. Intake control panel - Switches guarded, FAIL lights on, RAMPS OPEN
7. Internal lights - As required
8. Throttle rock test indicators - Both white
9. Fuel control panel:
   TANKS - OFF
   Probe - OUT, if external tanks empty to depressurize the tanks and avoid transfer from pressurized fuselage tanks into empty unpressurized external tanks
   Sequence - NORM, transfer lights as ap-propriate
   Fuel X-feed - AUTO
   All other switches - Aft or guarded.
10. IFF - NORMAL, press TEST, light on, STBY

11. Environmental control panel:
    Rain disp. — OFF
    Stby W/S de-mist — OFF
    Oxy/test — Press, check in green zone, contents.
    Cabin heat — AUTO
    Canopy de-mist — AUTO NOTE
    Cabin altimeter — Condition
    Intakes anti-icing — AUTO, FAIL lights out, press TEST, light ON

NOTE

With the intake anti-ice switch in the AUTO position and TEST pressed, the green indicator light illuminates for approx. 3 seconds. If a malfunction is detected in the system, the respective INTAKES ANTI-ICE FAIL light will illuminate.

12. Lamps — TEST, all indicators/warning lights on
13. External lights — As required

DANGER AREAS

ENGINE INTAKE AND EXHAUST DANGER AREAS

Engine: RB199-34R Mk. 101
Data Basis: ESTIMATED
Date: 26 AUGUST 1977

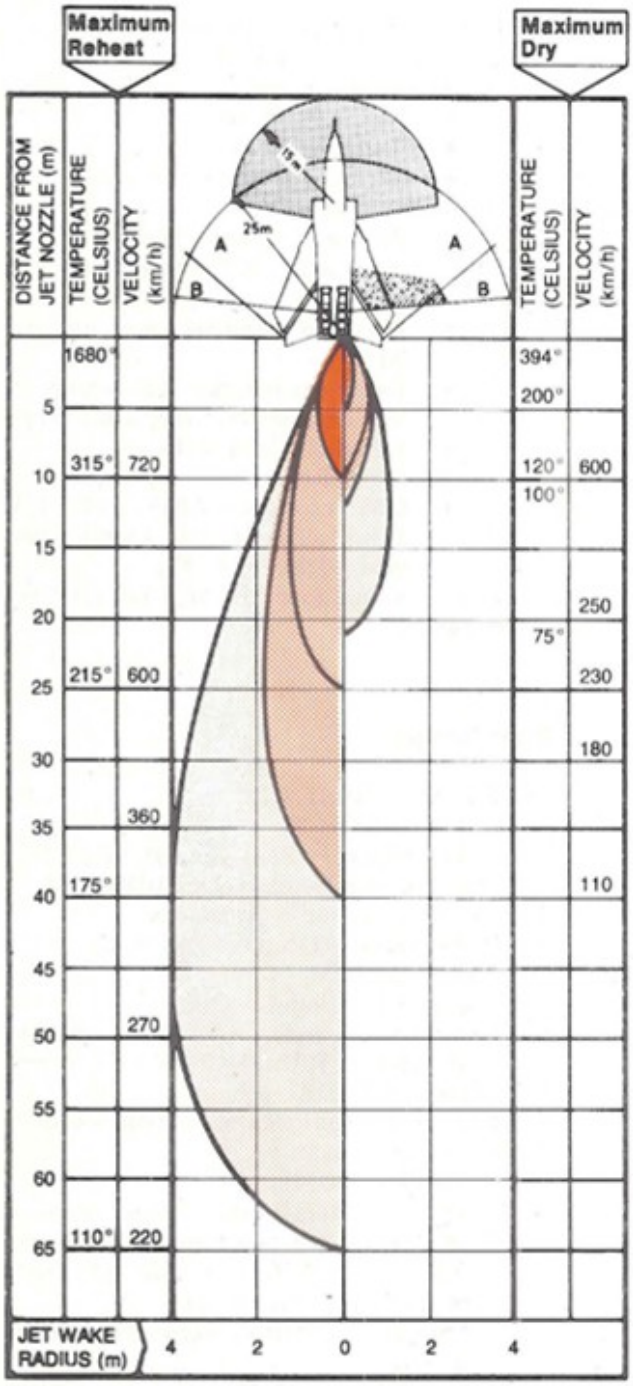

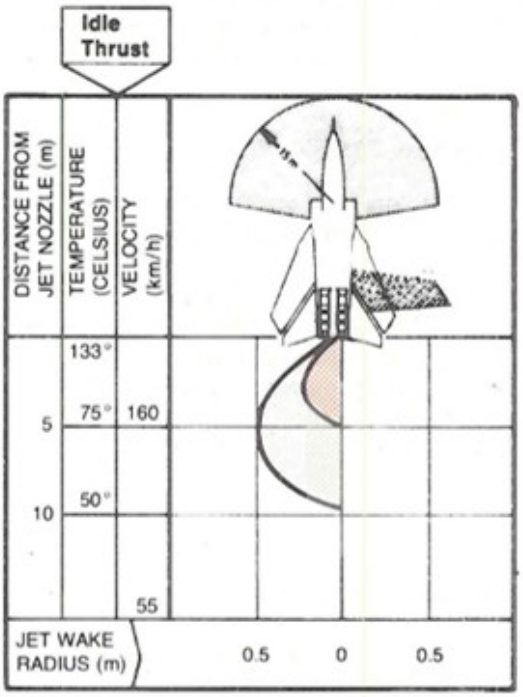

WARNING

- These areas must not be entered
  A – Whilst thrust reverse is in operation
  B – During actuation of thrust reversers
- With APU or engines operating at/or above idle rpm ear protection should be worn due to high engine noise levels.

NOTE

- For clarity only one engine jet wake is shown
- Patterns are averaged. Conditions such as intermediate power settings, obstructions, reflections and weather conditions can cause the pattern to vary

Figure 2-2 (Sheet 1 of 2)

DANGER AREAS

WARNING

- Do not operate the TFR in any other mode than STBY or TEST as there is a radiation hazard to personnel within the scanning sector of 15 meters
- Do not operate the GMR in any other mode than M without INT selected when personnel are within the antenna scanning sector of 37 meters

Transmitter	Safe Distance from Antennas		
	Personnel Health Hazard	Electro Explosive Devices (EED) (installed)	Fuel
Radar	17 m		
TFR	39 m		
HF Radio	1.0 m	37.0 m	
ECM			
Doppler	1.0 m		

ROTATING PLANES OF ENGINE TURBINES AND DANGER AREAS FOR FLIGHT CONTROLS

WARNING

Do not actuate flight controls with personnel in close proximity of the horizontal stabilizers.

TIRE AVOIDANCE

If landings are made which for some reason require maximum braking to stop the aircraft, avoid tire area for 30 min after aircraft has stopped. If necessary, approach from the front or rear only. If thermal release plugs have blown allowing tires to deflate, danger of explosive failure is minimal; however, danger of fire exists for at least one hour.

Figure 2-2 (Sheet 2 of 2)

STARTING ENGINES

Refer to Figure 2-2, Danger Areas, for the extent of engine intake and exhaust hazard areas.

BEFORE STARTING ENGINES

1. Ground crew/navigator — Ready for engine start, fire guard posted
2. If APU in prolonged operation
   APU bleed — CLOSED.
   X-drive clutch — AUTO

NOTE

At high OAT's (above 25° C) to avoid APU overloading, the X-drive clutch should he selected OPEN and therefore only the right engine may be started.

L hyd pressure — 70 to 110 bar

Generators — Check each generator in turn, both ON, FAIL lights out.

Ensure full serviceability of each generator by monitoring the relevant FAIL light and the GEN/CWP caption. Abort if any failure is detected.

CWP — AC, DC, GEN, TRU, L/R

3. Left hydraulics — ON, white sector, AUTO

NOTE

Ascertain that canopy rails are clear of obstacles before closing the canopy.

4. Canopy — As required

STARTING FIRST ENGINE

Observe engine start limitations in Section V of this manual. With the X-drive clutch selected to AUTO, both gearboxes are driven by the APU and either engine may be started first.

NOTE

If the first engine fails to start, make a further attempt on the right engine with the x-drive clutch OPEN.

Selecting engine start switch to the appropriate engine will provide ignition and simultaneously engage the torque converter, driving the relevant engine.

1. X-drive clutch — OPEN if required
2. Engine start — Select, light on

NOTE

During the crash recorder system interruptive BITE, which is initiated by the first operation of the ENGINE START switch, a tone of approx. 1 sec length can be heard in the emergency UHF band.

The engine start is initiated by selecting the ENGINE START switch to RIGHT or LEFT respectively. Engine ignition will be operative immediately and after a 5 sec delay fuel will be delivered to the starter jets. T7 will increase to approx. 250°C and at approx. 21% NH the throttle lever has to be set to IDLE to open HP cock. This causes a transient decrease of T7 to about 150°C. Thereafter a steady rise in T7 up to approx. 500°C will be seen. Simultaneously after a short slow acceleration to engine speed will wind up to the 65% NH idle speed.
T7 is not imposed during starting, but when T7 indication has changed to TBT, and absolute limit of 675°C indicated TBT shall not be exceeded.

3. Throttle — IDLE at 21% NH
4. TBT — 675°C max
5. START/CANCEL light — Out at 60% NH
6. CWP — OIL P out
7. Idle RPM — 64.5% to 68% NH
8. APU run light — Out

STARTING FAILURES

Hot Start

CAUTION

CANCEL START IN THE EVENT OF FLAME OUT, IGNITION FAILURE, ENGINE FIRE, OR ANY OTHER ABNORMALITY.

NOTE

With mod. 00644 embodied, selecting the throttle to HP SHUT will stop fuel supply to the starter jets and cancel the start cycle.

A hot start is indicated by an abnormally slow increase or stagnating NH, rapidly rising T7 followed by a switch over to TBT with rising temperature. If it appears that TBT exceeds 675°C with NH less than 65%, throttle should be set to HP SHUT and the start/cancel button pressed to cancel starter jet fuel and ignition. Dry crank is recommended to reduce high engine temperatures subsequent to a hot start. In the event of an engine stagnation (hot start) a dry crank can be made without delay as necessary to reduce TBT.
To cancel start:

1. Throttle — P SHUT
2. START/CANCEL button — Press

WARNING

A FURTHER START SHALL NOT BE ATTEMPTED IF TBT 675°C WAS EXCEEDED

NOTE

T7 should be below 250°C before a further start is attempted.

Wet Start

If an engine fails to accelerate with the throttle set to IDLE at 21% NH, set the relevant throttle to HP SHUT and press the Start/Cancel button. Investigate prior to attempting further starts.

WARNING

ALLOW 2 MINUTES BETWEEN START SELECTION; HOWEVER, AN IMMEDIATE DRY CRANK MAY BE MADE TO REDUCE ENGINE TEMPERATURE, IF NECESSARY.

Dry Crank

Dry crank is recommended after wet starts.

1. Throttle — HP SHUT
2. Ignition (Rapid T/O panel) — OFF
3. CWP — Press and hold GND ACT button during start cycle

NOTE

With the ignition master switch OFF, the central warning system is deactivated. If the warning system is required during a dry crank, i.e., when dry cranking the second engine, press and hold the GND ACT button on the CWP.

4. Engine start — LEFT or RIGHT

When cycle complete, START/CANCEL light out.

5. Ignition (Rapid T/O panel) — FLIGHT

Attempt further start.

Engine fails to rotate.

Set throttle to HP SHUT, press the start/cancel button and check that all switches are set correctly. No further starting attempts are allowed if they were in correct position.

Engine running inside NATO Hardened Aircraft Shelters (HAS)

To avoid damage to the aircraft structure, the limiting acoustic noise design level shall not be exceeded. Therefore, following engine power limitations apply to single or double engine running:

With the shelter doors closed, the maximum permitted engine setting is IDLE.
With the shelter door open, the setting shall not exceed 85% NH.

AFTER FIRST ENGINE START

1. X-drive clutch — AUTO (if OPEN for first engine start; check GEN on)
2. RCOV — ENG

NOTE

Check with ground crew that the respective RCOV valve indication on the ground service fuel panel changes from INT to ENG as engine NH passes approx. 59%.
If ENG does not appear, shut down the affected engine as a malfunction of the RCOV circuit shall be suspected.

3. External power — Disconnect
4. L/R hyd pressure — Check white sector
5. CWP — Check L/R CONTR, L/R UTIL, out
6. Utilities test — Check LEFT/RIGHT: L/R UTIL and RAMP captions on CWP
7. Wing sweep — 25 degrees
8. Flaps — Cycle, leave up
9. Manoeuvre flap/slat — Cycle, leave in
10. Airbrake — Cycle, leave locked in
11. Controls — Trim 2° nose up. Confirm tailerons full and free deflection.

WARNING

PERSONNEL SHALL STAY CLEAR OF ALL CONTROL SURFACES WHEN THEY ARE IN OPERATION.

12. CSAS — Engage, check all lights out.
13. Controls — Confirm full deflection of surfaces, pitch, roll and yaw.
14. SPILS — ON, reset, light out.

NOTE

The CSAS/SPILS BITE is required to be carried out at every seventh flight or after a max period of seven consecutive days, whichever occurs first.

If CSAS BITE (pre-flight) required: the CSAS BITE comprises the automatic test and a test sequence which requires manual pilot inputs.
The lateral and pitch programs run in parallel, and the automatic test is completed within 2 min, 43 sec. SPILS BITE is initiated by and runs in conjunction with the CSAS BITE. The successful completion of the automatic test is indicated by the white TEST light flashing.
A good SPILS BITE is indicated by the white flashing BITE light which will extinguish if the TEST button on the CSAS control panel is pressed. During the test cycle the FAIL light on the SPILS control panel may illuminate intermittently.

15. CSAS/SPILS BITE — Check
    N\VS — Check disengaged.
    Test button — Press, TEST light on SPILS control panel: BITE lit.

WARNING

IN EMERGENCY CASES STOP BITE BY LOWERING THE BITE "TEST" BUTTON COVER GUARD.

During the initial part of the automatic BITE test period, carry out a trim check. Whereas the EMERG trim check requires only partial trim inputs, the NORM trim shall be checked over its full range to the stops. These trim checks shall be completed prior to the end of the automatic BITE period.
TRIM (P + R) — EMERG function o'ride, NORM, full range, leave fully nose down, roll neutral.

NOTE

To ensure a valid CSAS BITE, the pitch trim shall remain full nose down and a LAMPS test shall not be performed during the automatic test period.

Under low temperature conditions, NO-GO status may be caused by a low hydraulic fluid temperature. The fluid temperature may be raised by exercising the primary flight controls for a min. of 1,5 min; thereafter the BITE run may be repeated.

If NO-GO:

Test button — Press
CSAS modes — Engage separately
Controls — Move for 1.5 min
BITE run — Repeat (omit Trim check, if completed)

If still NO-GO — Abort, record CMP

When the TEST light commences to flash, the manual part of the BITE should be initiated. To satisfy BITE requirements, the pitch trim shall be in neutral.

Pitch trim — Neutral
CSAS modes — Engage separately.
Norm/Train switch — TRAIN.
Pitch MD — Press, lights on, press out.

When Pitch MD is depressed, the first time, the system goes into a second failure status, subsequently reverting to PMD normal mode when the button is pressed for a second time.

Norm/Train switch — NORM, guard down
Yaw trim — Full range, neutral

To ensure proper conduct of the test, full and deliberate control movements to each end stop shall be made, with the control being held at each stop position for a minimum of 2 sec. Pitch-up and rudder control movement demand considerable pilot effort.

Controls hold each end stop 2 sec:
Pitch nose down first, then up
Roll MD press — CSAS CP/CWP clear
Roll
Yaw

If TEST light flashes:

Repeat pitch nose up.

If still flashing:

Abort
Test button — Press: TEST light out, GO.
light on

If NO-GO:

Repeat lateral inputs.

If still NO-GO:

Abort
Test button — Press again.

Confirm:
GO light out
Guard down
CSAS CP/CWP clear SPILS CP clear

Should the system fail the BITE, the white BITE and amber FAIL caption on the SPILS control panel will illuminate steady and the red SPILS/CWP caption is lit.

NOTE

If the BITE fails, select SPILS to OFF and restrict the aircraft non SPITS AOA and manoeuvre limits.

If CSAS/SPILS not required:

16. Trim check — EMERG function and o'ride,
    NORM, full range, P/R/Y

In all cases:

17. Trims — Set for take-off
18. Ramps — BITE (if required)

NOTE

The ramps test is required before any planed supersonic flight.

19. TF Radar — Press TEST, NO GO light out, check E-Scope display, deselect TEST, B-risk light out

NOTE

With IN not aligned (e.g., not in NAV with STATUS 4) the red TFR/CWP caption will remain illuminated till the end of the test cycle.

STARTING SECOND ENGINE

Refer to STARTING FIRST ENGINE procedure step 2 to 7.

AFTER SECOND ENGINE START

1. RCOV — ENG check with ground crew
2. X-drive clutch — PUSH OPEN
3. CWP — TEST 2, L/R VIB

The selection of TEST 2 with running engines is necessary to confirm proper functioning of the vibration warning system. Due to low vibration levels, the L/R VIB captions may not come on at IDLE but shall illuminate below 75% NH.

NOTE

TEST 2 should not be selected in flight except to confirm the integrity of the fire warning system following an engine fire, because the fire warning may remain on after completion of the test.

Generally, LANE 1 is the preferred lane due to the auto change feature to LANE 2 in the case of a LANE 1 failure. LANE 2 will perform the same functions as LANE I and all operations are practically identical in both lanes.

4. Lanes test:
   LANE 1 — Check control
   Lanes test — Both press
   CWP : 1,/R Tin lit, 1,/R OIL T, L/R
   FUEL T, 1,/R THROT
   TBT indicators 925 ± 5°C, check RE-HEAT caption out

After releasing the buttons, the temperature indications return to normal and the CWP caption extinguish.
When both engines are running the operation of the CUE automatic control lane changeover facility should be checked with LANE 1 selected. Pressing and holding the LANES TEST buttons will cause a light transient (max 2% NH) to occur. NH should not exceed 75%. At the same time the L/R THROT warning on the CWP will illuminate and the TBT indicators will wind up to 925 ± 5°C. Pressing the left LANE TEST button only (in LANE 1 and 2) will initiate an internal check of the engine temperature warning systems, and the amber L/R FUEL T, L/R OIL T in the front cockpit and the red L/R TBT warnings in both cockpits for both engines will illuminate on the CWP.
Upon release, all warning lights should extinguish and TBT/T7 readings return to normal.
When LANE 2 is selected and the same test is repeated, the same warnings and indications as above will be displayed but the light transient will be seen immediately when LANES TEST is selected. In addition, the nozzles close to 5 -: 13% (ENC) and the amber REHEAT caption on the CWP in the front cockpit will illuminate. To reset the nozzle to normal, the relight buttons shall be pressed. After approx. 3 seconds the engines will return to the normal nozzle position and the REHEAT caption will extinguish. Thereafter the lane switches shall be reelected to LANE 1 and again the throttle warning will illuminate for a short period.

WARNING

IF THE REHEAT/CWP IS LIT, ABORT. DO NOT SELECT LANE 2.

NOTE

A lanes test with LANE 2 selected will cause the REHEAT indication on the Maintenance Panel to reset. With cold engine the appropriate TBT caption may not come on until about 2 minutes running time are reached.

Eng Control - Both LANE 2

Throttles — Check control individually to 73% NH min. no THROT/REHEAT CWP warnings.

Eng control — Both LANE 1

When LANE 1 is reselected the L or R THROT indication will illuminate during the transfer and extinguish when the transfer is completed.

Taxi nozzle — Check function

Proper function can be determined by the Aj indicator showing 100% when selecting TAXI NOZZLE.

5. CRPMD/RPMD — Functional cross-check:

RPMD — R
CRPMD — STB, map does not move, passive MKR at center.
RPMD STB light on, no change of display
CRPMD — NTH UP, map north orientated, check PP and track-line
RPMD — NTH light on, map orientated, SL, check function, PP □, check PP moves to marker □. Check all SCALES, PP 0, check PP moves to 0 marker.
CRPMD — NRM, map track orientated, PP at bottom of display

INTERNAL CHECKS REAR COCKPIT (STRIKE)

1. Ejection seat — Check
2. Lamps — TEST, all indicators/warning lights on
3. TV/TAB 1 and 2 — ON
4. MCCP:
   IFU 1. and 2 — Both ON
   WFG — ON
   MC—ON
5. SAHR:
   Mode — FREE, check 8888.
   Variation — Set

NOTE

For shelter operation SAHR may fail and require realignment outside.

6. INCDU:
   D31/D32 — OFF
   Align — NORM
   Mode — IPI
   Status — 7/blank
   DIS — HDG/DR, check heading, enter if required, PP, enter lat/long.
   Mode — ALN
   DIS — D31 and D32, insert as required.
   LH status — 0
   Mode — NAV
7. RDE/MDE :
   Master switch — OFF
   Mode selector — REPLAY
   Cassette — Insert
   Tape pos readout — Check 000
   Master switch — STBY
   Tape drive switch — REV, hold until counters stop.
   Mode selector — DATA ENTRY
   Master switch — START until TV/TAB displays RDE COMPLETE, FAULT or FAILED, then STBY
   TV/TAB — NAV/PLN

NOTE for Microsoft Flight Simulator:

RDE will always return “COMPLETE” if a flight plan was created, and “FAILED” otherwise.

If RDE FAULT:

TV/TAB — Fault line in ROL, amend and ENTER.

If RDE FAILED:

CVR — Repeat RDE or manually amend.

If MCCP FAIL or CWP CMPTR caption lit:

CVR master switch — STBY
MC — Recycle, if required
CVR — Repeat RDE (new cassette or enter manually)

8. Fuel — Check with front cockpit
9. Ejection seat — Strapped in
10. MDC:
    Handle — Secure
    Pin — Stow
11. Oxygen — ON, 100, check MI, AM, test safety pressure, check MI, AM/100 as required
12. Jack release handle — Stowed, wire intact
13. Canopy jettison handle — Stowed, wire intact
14. HDDR — Cassette loaded
15. Wander lamp — Check and stow
16. Special weapons panel — As required
17. HDDR control panel — Set as required
18. MRCP — Set as required
    Except: Frequency — FIXED FREQ
19. Oxy test — Press, check in the green zone, contents
20. Landing gear indicator — 3 greens
21. WPU BITE — Completed
    Chan fault — Both blank
22. Display source - Check A and B available
    weapon package - Selected
23. Artificial horizon - Erect
24. CRPMD - M, INT after 5 seconds
25. CRPMD/GMR (complete):

WARNING

EVEN WHEN THE GMR IS OPERATING ON GROUND IN M OR M + S (STANDBY) MODE, THERE MAY BE A HAZARD FROM MICROWAVE RADIATION WITHIN THE ANTENNA SCANNING SECTOR (TO A DIS¬TANCE OF 37 METERS). THEREFORE, WHEN M HAS BEEN SELECTED, INT PUSHBUTTON HAS TO BE PRESSED AFTER 5 SEC AS A SAFETY PRECAUTIONS.

Mode - NI, INT after 5 seconds
Display — NRM
IND MKR map — Set
Cursors — OFF
Frz/int hold — FADE
S-S/cont inv S-S
Fade — As required
Scale — 20/40/80
Test — MAP, PL I and PL 2 lights on
NHC — Cursors and marker switch up, 90 sec after M selection align test frame, insert CRPMD test — MKR, PL 1 and PL 2 lights out, MKR test format correct, adjust THRESHOLD, OFF

25. Altimeter and CSI — Set and check
26. RWR and ST\VI — Set
27. NWAMS — All lights out
28. ECM control unit — Set
29. CWP — TEST 1, TEST 2 (refer to RIGHT QUARTER PANEL, step 2).
30. CVR:
    Cassette — Check loaded.
    Mode selector — MAN or AUTO
    Master switch — STI3Y or START
31. Doppler — ON, check test velocities
    SEA/LAND as required. Check TEST deselected.

NOTE for Microsoft Flight Simulator:

Doppler system is not simulated in this MSFS rendition.

32. Anti dazzle — OFF
33. Command ejection — As required
34. HF — OFF
35. Refuel probe light — OFF
36. CRPMD mode — Confirm INT selected. M + S after first engine start, check all fail lights out
37. TV/TAB, CRPMD — Enter system time, check mission data
38. INCDU — Check STATUS, select NAV
39. NMCP:
    Nav modes — All available, select MAIN Steering mode — As required.
40. TV/TAB — PP enter, check POS
41. SAHR heading — Check if FES out, slew to IN heading

After 3 minutes warm up:

42. MRCP — Test, light out after 1 minute, NO-GO out

TAXIING

For "Turning Radius" during taxi operations, see Figure 2-3.
Braking during taxiing prior to takeoff shall be minimized to reduce the hazard associated with hot brakes in the landing gear bay after retraction.

WARNING

IF. THE TAKE-OFF IS MADE WITH OVERHEATED BRAKES, A FIRE HAZARD CAN ARISE AFTER LANDING GEAR RETRACTION, IF A HYDRAULIC LEAK IS PRESENT.

NOTE

- If heavy or prolonged braking is used during taxiing, the brakes may have insufficient energy capacity in the event of an aborted takeoff.
- Use of thrust reverse is not permitted because the reverse thrust locking mechanism will not be inspected prior takeoff.
- for taxi distance refer to Section V of this manual.

PRE-TAXI CHECKS

I. Air system master - ON
2. Anti-g - Check
3. Confirm with ground crew:
    CMP - Reset.
    Panels - Secure
4. OTF and height fix - Perform as required

NOTE

The MC may not use height fix information immediately to update height, therefore do not repeat height fixing to prevent accumulation of height errors.

5. NWS — Engage, LOW light on
6. ICO — Press, LOW light out: when pressing ICO will cancel all other inadvertent selections
7. NWS — Engage, select HIGH (re-ingest audio)
8 BRAKES — Press BRAKES TEST

When releasing the BRAKES TEST button, observe a momentary pressure drop and no A SKID.CWP caption.

CAUTION

DO NOT PRESS THE TEST BUTTON WITHOUT CHOCKS IN POSITION OR AT HIGH POWER SETTINGS BEFORE TAKEOFF.

9. Hydraulics -- Left ON, right AUTO (white sector)
10. EPS — Pin remove, A1.71.0, light out

The Emergency Power system control switch shall be selected to the AUTO position for all flying to protect against the consequences of a possible double engine flameout.

WARNING

IN CASE OF INADVERTENT SELECTION OF THE EPS TO ON, THE ONE-SHOT BATTERY HAS TO BE REPLACED BEFORE TAKE-OFF.

11. Flight refuel — Probe in, lights out (3)
12. Canopy — Closed and locked, seal inflated

TURNING RADIUS

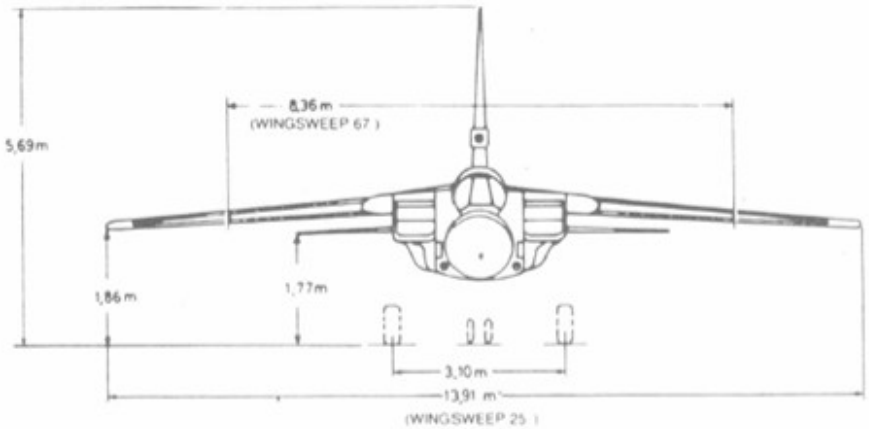

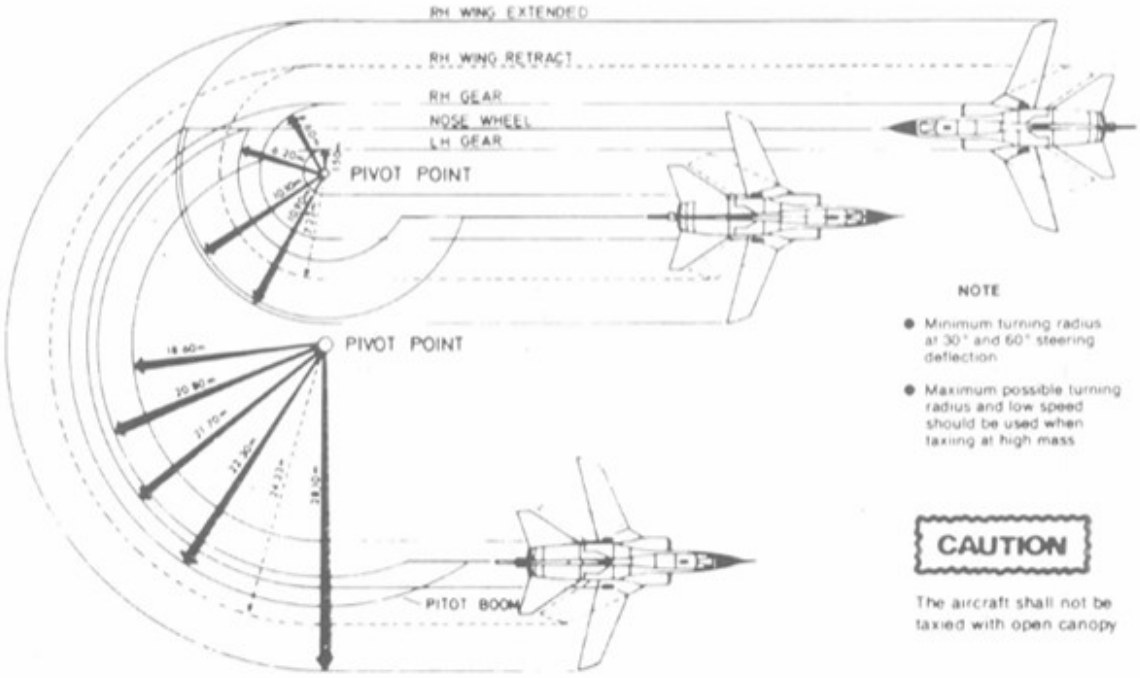

NOTE

- Minimum turning radius at 30° and 60° steering deflection
- Maximum possible turning radius and low speed should be used when taxiing at high mass

CAUTION

The aircraft shall not be taxied with open canopy

Figure 2-3

WARNING

13. Fuel temp — Below 70°C
14. Voltmeter — Check above 25V

NOTE

For shelter operation, checks 15 to 23 should be completed outside shelter.

15. Wing sweep — As required
16. Flaps — As required
17. AFDS control panel — ATTU FAIL light, press if lit
18. Oxygen — AM
19. Seat pins — Stowed
20. Landing gear pins — Check removed
21. External/A-coll lights — As required
22. Compasses — Cross-check
23. Altimeters — Set, STBY, compare, RESET

NOTE

With the front cockpit altimeter in STBY or RESET mode the tolerance for a given QNH setting should be within ± 60 ft of the field elevation. The total difference reading between STIBY and RESET mode should not exceed 100 ft. The difference between front and rear cockpit altimeter readings should not exceed 75 ft in STIBY mode.

TAXI CHECKS

1. Brakes - Check normal and emergency, reselect normal.

CAUTION

DO NOT SELECT PARKING BRAKE WHILE THE AIRCRAFT IS IN MOTION AS THIS WILL ABRUPTLY LOCK THE WHEELS, AND CAUSE TIRE DAMAGE.

NOTE

Care should be exercised when selecting the brake handle from NORMAL to EMERGENCY, as continued pulling and turning on the lever may cause it to enter the parking segment inadvertently, resulting in an abrupt locking of both main wheels. To deselect the handle from EMERGENCY to NORMAL, the lever shall be turned and pushed into position.

2. NWS — Check LOW, select HIGH.

During taxi, the nozzle position may be selected to TAXI NOZZLE OPEN (100% Aj), reducing idle thrust by approx. 40%. Having selected TAXI NOZZLE OPEN, reverse thrust is inhibited and vice versa. A mechanical interlock within the throttle box will limit engine RPM to 80% NH with TAXI NOZZLE OPEN.

NOTE

With TAXI NOZZLE selected, the amber VENT caption on the CWP may illuminate due to insufficient LP Compressor bleed air pressure. Deselecting TAXI NOZZLE will extinguish the warning.

3. Left throttle Rock outboard (LD) check differential spoilers, rock inboard.
4. CRPM Deselect INT (in safe area)
5. GMR — Functional test, then M + S and INT
6. Flight/nav instruments — Check

BEFORE TAKE-OFF CHECKS

1. Wing sweep - 25°
2. Airbrakes - IN and locked
3. Flaps - MID
4. Trims - Set for take-off
5. X-drive clutch - AUTO, light out
6. Selective/emergency jettison - Set
7. Flight controls - Full and free
8. Hydraulics - Left ON, right AUTO (white selector)
9. EPS - AUTO, light out

10. Fuel - Quantity, balance, transfer, temperature
11. Ignition (Engine control panel) – NORM

The ignition selector switch should remain in the NORM position which will guarantee automatic ignition in case of a flame-out or an extreme deceleration in flight or during take-off. With the ignition selector switch in NORM position it should, however, be kept in mind, that the automatic ignition circuit will always be operative if the throttle is not in the HP SHUT position and certain NH speed conditions exist. If, for instance, one engine is shut down in flight or on the ground and the throttle is then reopened (for lift dump or reverse thrust checking), it is possible that any fuel remaining in the engine may be ignited.

12. Oxy - Contents, connections, flow, AM/100
13. Intakes anti-ice - As required
14. External lights - As required
15. Emerg radio - Check channel set
16. Canopy - Closed and locked, handle fully forward check seal
17. Command ejection - As briefed
18. Pins - Stowed, 4 front, 2 rear
19. Take-off emergency brief – Complete

When cleared for line up:

20. Air system master - As required
21. Rapid take-off panel - Gang bar up
22. Harnesses - Tight and locked, restraints, and PSP connected, visors down.
23. IFF - As required
24. WCP1 Chan fault - Both blank, except for uninstalled pylons/MWCA's coded Bogus
25. MASS - As required.

LINE UP CHECKS

1. NWS - LOW
2. TR - Indicator blank
3. Engines check:
   GVNR TEST (if required) - NI, (LANE 1) 80 ± 1% Throttles - MAX DRY, minimum power check if required.

The NL governor check need only be carried out every 10 flying hours.
To perform the governor check with the ENG CONTROL still in LANE 1, select and hold the GVNR TEST switch to NL and advance the throttles to MAX DRY. The RPM indicators will automatically display NL speed which shall stabilize at 80 ± 1%.
Retard the throttles to below 80% NL, thereafter, release the GVNR TEST switch to OFF to avoid the risk of a surge being induced through momentary overfilling.
Refer to Minimum Power Check table, Figure 2-4, to confirm that engine values are within limits.

Throttles - MIN REHEAT, (MAX DRY for noise abatement take-off)

CAUTION

WHEN SELECTING REHEAT, ADVANCE THROTTLES STRAIGHT FORWARD. DO NOT EXERT ANY OUTBOARD PRESSURE TO AVOID SELECTING TR. SHOULD THIS ACCIDENTALLY OCCUR, CANCEL TR, REDUCE POWER AND RELEASE BRAKES TO PREVENT THE AIRCRAFT TO TIP OVER.

NOTE

If a reheat blow out occurs, the nozzle will stay at the selected min reheat position.

4. CWP - All lights out

5. Brakes - [folding, check pressure

NOTE

Wheel slippage on runways with anti-skid surface shall be avoided to prevent excessive tire wear.

TAKEOFF (TYPICAL)

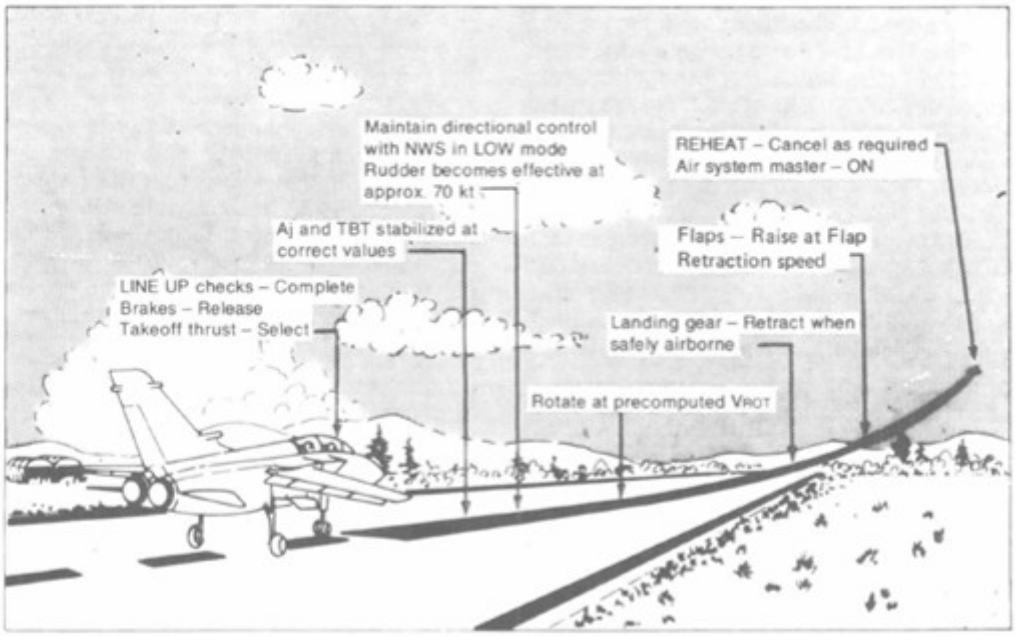

TAKE-OFF

NORMAL TAKE-OFF

Normal take-off will he performed using MAX REHEAT thrust, flaps set to MID, and air system master selected to ON.
Directional control during the initial take-off run is easily maintained, as the nosewheel steering is very effective and NSAS will counteract any directional disturbance with immediate corrections. At approximately 70 kt rudder should he used to maintain directional control.
The aircraft will display conventional take-off characteristics. Rotate the aircraft at the computed rotation speed. It is not advisable to apply aft stick pressure prematurely since CSAS manoeuvre demand characteristics will cause full taileron deflection due to "O" rate feedback signals. This will result in increased drag and ground roll. When rotating speed is reached, apply moderate aft stick pressure. The aircraft will become airborne with approximately 11 units AOA. At higher masses and consequently higher rotation speeds, elevator effectiveness will be greater. Therefore, back stick inputs should be smooth to match the take-off speed. Increase back stick pressure following liftoff to reach 13 units AOA. When established, the 50 ft obstacle high will be cleared and a smooth derotation should be started to attain a convenient climb attitude of 10 to 12 degrees. This technique will ensure that the computed take-off performance data are. achieved.
Asymmetric thrust will cause moderate yaw only which is easy to compensate with small rudder applications.

PERFORMANCE TAKE-OFF

Performance take-off will be performed with COMBAT thrust, flaps set to MID and air system master selected to EMERG RAM AIR. This take off is recommended in case where single engine rate of climb is insufficient for normal take-off due to high OAT /lower thrust or runway length available. The technique as described under normal take-off applies except that more positive aft stick pressure is required at computed rotation speed and that after lift-off the aircraft is momentarily rotated to 15 units AOA till clear of obstacles; thereafter derotation should he started. Depending on the conditions, pitch attitudes up to 30 degrees can he expected shortly after lift-off.

NOTE

At extreme aft CG conditions, rotation should be initiated more carefully in order not to overrotate in pitch.

HEAVY MASS TAKE OFF

NOTE

The DWN flap setting for take-off is not yet cleared. In heavy mass conditions apply normal/performance take-off procedure.

Heavy mass take-off from 25000 kg and up will be performed with combat thrust, flaps set to DWN and Air System Master set to EMERG RAM AIR. The recommended trim setting is neutral.
The technique is identical to that described under Performance take-off. Due to full flaps and high masses, high rotation stick forces shall be expected, however no extreme pitch attitudes will be encountered after lift-off.

WARNING

IF AN ENGINE FAILS AFTER REFUSAL SPEED, THE TAKE-OFF SHALL BE CONTINUED AND THE AIRCRAFT ROTATED AT ROTATION SPEED TO 15 UNITS AOA. AFTER BECOMING AIRBORNE, ALL EXTERNAL STORES SHALL BE JETTISONED AND LG RETRACTED. DURING THIS PHASE THE AIRSPEED WILL INITIALLY DECREASE.

NOTE

At extreme aft CG conditions, rotation should be initiated more carefully in order not to overrotate in pitch.

CROSSWIND TAKE-OFF

Under crosswind conditions, the aircraft has a strong tendency to weather-vane into the wind. This tendency can be well controlled during take-off roll with the augmented nose wheel steering and normal use of rudder. Refer to "Crosswind Take-off and Landing Limits", Section V.

NOTE

Depending on windspeed and gusts, rotation speed should be increased by approx. 10 kt.

TAKE-OFF ON SLIPPERY RUNWAY

If tire's start to skid in MN REHEAT, release brakes, correct any tendency to slip and select max thrust without delay.

AFTER TAKE-OFF/DEPARTURE CHECKS

1. Landing gear — UP, lights out.
When the aircraft is definitely airborne, retract the landing gear. Check all UP indications safe. The landing gear and landing fear doors should be UP and locked before reaching 250 kt.

2. Flaps — UP at flap retraction speed
1 Landing gear retraction, flap retraction from MID to UP, and thrust reduction will cause only significant pitch changes. Normally REHEAT should Abe cancelled at approx. 250 to 300 kt.

3. Air system master — ON
4. SPILS — As required.
5. MASS — As required.

FLAP RETRACTION SPEED

The chart depicted in figure provides flap retraction speed versus masses with two engines operating. Adhering to the recommended speeds will results in optimum climb potential.

FLAP RETRACTION SPEED CHART

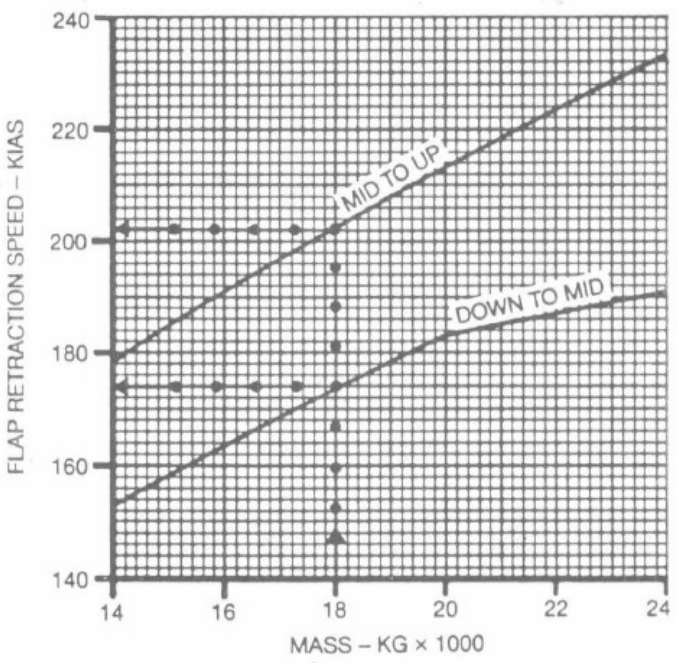

CLIMB/CRUISE

MAXIMUM DRY CLIMB

This climb is recommended when an optimum range climb with minimum fuel consumption is desired.For a clean aircraft, 25-degree wing sweep, the optimum climb speed is 375 kt/0.7 M at standard day.
For detailed information refer to AER.1F-PA200-1A, Performance Data.

MAXIMUM REHEAT CLIMB

This climb is performed with 45 degrees wing sweep to gain maximum altitude within minimum time. For a clean aircraft at standard day, the optimum climb speed is 0.9 M.
For detailed information refer to AER.1F- PA200- 1A, Performance Data.

CRUISE

NOTE

- With a single shoulder mounted U/FUS tank plus two i/b wing mounted tanks, fuel imbalance develops because the asymmetric tank feeds into the respective fuselage group. Manual fuel management is necessary to distribute its fuel equally between the front and rear fuselage groups.
- The aircrew shall check that wing fuel is transferring at total fuel remaining of 2050 ± 50 kg. If wing fuel transfer has not started with a total fuel remaining of 1900 kg, the SEQUENCE switch shall be set from NORM to WG. Return the switch to NORM when wings are empty.
- There is no cockpit warning of an 'ECS shutdown at aircraft altitudes below 26000 ft. To minimize the risks of operating without cooling air to equipment the aircrew shall check frequently the status of the ECS by confirming cockpit airflow. Post mod. 00921: failure of air system pressure is indicated by illumination of the amber ECS caption on CWP.

AIR TO AIR REFUELLING

NOTE for Microsoft Flight Simulator:

This MSFS rendition features a simplified air-to-air refueling module, which basically allows the player to refuel the aircraft "out of thin air" in certain conditions. Specifically, the aircraft speed must be below 375 and above 200 knots, and altitude must be above 2000 feet. If these conditions are met, and the refuel probe is extended, flight path and speed will be monitored for approximately 20 seconds – after which the airspeed and altitude are recorded as reference speed and altitude. After that, a difference of +/- 50 feet or +/-10 knots will cause a disconnection (and internal timers will be reset). If the plane is flown within those limitations, after another 10 seconds the refuelling will start.

RECEIVER ROLE

JOINING

1. Late arm/trigger — SAFE
2. MASS — SAFE
3. Fuel — Check quantity
4. TACAN — REC
5. IFF - STBY
6. HF - Off
7. CRPMD — M + S
8. Nav a/coll lights — As required.

BEFORE CONTACT

1. Wing sweep — 25°
2. Tank inter — CLOSE
3. Fuel X-feed — CLOSE
4. Tanks — As required.
9. Probe — OUT, RDY light on
10. Probe light — As required.
11. Rudder trim — As required.

WARNING

EXCEPT IN EMERGENCY, REFUELLING SHOULD NOT BE ATTEMPTED WITH FRVL/CWP CAPTION LIT, SINCE FUEL WILL ENTER THE TANK GROUPS THROUGH THE TRANSFER SIDE OF THE REFUEL TRANSFER VALVES AND DAMAGE TO THE CELLS MAY OCCUR IF THE TANKS ARE FILLED, BECAUSE OF CONTINUED TANKER DELIVERY PRESSURE.

AFTER REFUELLING

After breaking contact with the drogue, the system is restored to normal, and the transfer sequence re-started after selecting the TANKS switch to OFF and the PROBE switch to IN.

1. Fuel — Check quantity
2. Probe — IN, RDY and U/L lights out
3. Probe light — OFF
4. Tanks — OFF, FULL light out
5. Fuel X-feed — AUTO
6. Nav and a/coll lights — As required
7. HF, CRPMD, TACAN, IFF — As required.

X-drive clutch closure may have occurred due to differential throttle operation.

8. X-drive clutch - AUTO, light out
9. Rudder trim - As required

TANKER ROLE

Tanker role is not implemented in this MSFS simulation.

DESCENT/RECOVERY

TYPES OF DESCENT

	RAPID	RANGE	INSTR 1	TACT
WING SWEEP	67°	25°	25°	45°
AIR BRAKES	OUT	IN	OUT	IN
THROTTLES	IDLE	IDLE	80%	80
SPEED	0.85M/ 450 kt	0.75M/ 250 kt	0.75M/ 300 kt	0.75M/ 420 kt

Four types of descent may be flown as shown in Figure 2-7. Provided that CANOPY DEMIST was set to AUTO before take-off, canopy and windscreen will be anti-mist heated automatically. Should the windscreen or canopy do mist up, select STBY W/S DEMIST and/or CANOPY DEMIST to ON, on the ENVIRONMENT control panel. Selection of STBY-WS DE-MIST will be accompanied by a loud initial thump.

DESCENT/RECOVERY CHECKS

1. Instruments — Check, ADI erect, compare HUD/HDD
2. Radar Alt — Set bug as required.

CAUTION

IF THE 600 HZ WARNING TONE IS TRIGGERED BY THE RAD ALT LOW

HEIGHT BUG, AND SUBSEQUENTLY CANCELLED BY DEPRESSING AN ATTENTION GETTER, THE WARNING TONE IS INHIBITED, AND WILL NOT BE REACTIVATED BY ANY OF THE ASSOCIATED FAILURE CONDITIONS E.G. NWS FAILURE OR T/R REINGESTION.

Frequent checks of the HUD against HDD instruments are required since certain possible failures may affect the HUD without the appropriate warning indications. Also, the front cockpit altimeter in RESET mode should be cross-checked against alternative sources as radar altimeter or rear cockpit altimeter corrected for pressure errors. All cross-checks should preferably made under steady flight conditions.
If any of the following symptoms occur while in RESET mode, the altimeter should be selected to and remain in STBY mode, and the readings verified from other sources with appropriate allowance for pressure errors:

- ADC or IFU 1 warning on the rear CWP
- Occulting of HYD baro altitude
- Discrepancies between HUD and HDD baro altitude readings

NOTE

If auto reversion of the front cockpit altimeter to STBY mode occurs, the readings should again be verified from other sources.

3. TF radar — As required, set SCH
4. De-mist — As required.
5. Intake anti-icing — As required.
6. Wing sweep — As required.
7. X-drive clutch — AUTO, light out.
8. Land/taxi light — As required.
9. MASS — As required.
10. Trainer only: TR — FRONT

TF OPERATION

Before operating in manual or auto TF, ensure proper functioning of all applicable systems. Observe TF operating limitations in Section V of this manual.

AP CHECK

Height — Minimum safe
AP — Engage in ALT or MACH, check SFCO and ICO function, AP re-engage if required.

TF CHECKS (NOT LOWER THAN 200 FT ABOVE SCH)

1. V/UHF ANTENNA — Upper
2. TACAN - OFF/REC
3. TFR — ON, check ESRRD returns and indications.
4. Altimeters — Compare HUD rad alt with HDD rad alt and HDD baro. Set rad alt bug 10% below SCH.

WARNING

DISCONTINUE. TF IF RAD ALT NOT SERVICEABLE

5. AEDS control panel — FD, TRACK or HDG, SCH, ride, TF READY light on, TF.
6. HUD — T displayed; FD command correct.
7. AP — Engage, if required

NOTE

- If TER caption on CWP or NO GO on TF RADAR CP illuminates in STIBY mode, the TFR shall not be engaged.

- To avoid possible NO GO status, prior TF operation:
  - TACAN shall be switched to OFF/REC
  - No transmitter shall be made during TF flight from the lower UHF antenna.

WARNING

THE POSSIBILITY OF AP MALFUNCTION LEADING TO SUDDEN RAPID AND LARGE EXCURSIONS IN PITCH AND ROLL CANNOT BE EXCLUDED AT THE PRESENT TIME. THEREFORE, THE PILOT SHALL KEEP A HAND ON THE STICK WHENEVER THE AP IS ENGANGED AND BE PREPARED TO TAKE CONTROL IMMEDIATELY FROM THE AP IN ORDER TO REDUCE PIO'S, OVERRAPID STICK INPUTS SHALL BE AVOIDED.

If abnormal RH/ANDS behavior is suspected, RH hold operation shall be discontinued immediately irrespective of the presence or absence of other warnings.

RHH CHECKS

1. Altimeters — Compare HUD rad alt with HDD rad alt and EIDD baro. Set rad alt bug 10% below intended height.
2. AFDS control panel — RH, FD; other modes as required, engage, lights on
3. HUD — FD command correct.
4. AP — Engage, if required

NOTE

If abnormal RH/AFDS behavior is suspected, RH hold operation shall be discontinued immediately irrespective of the presence or absence of other warnings.

LANDING

Below 6 units AOA with full flaps, there is a mild proverse yaw due to roll inputs. Above 6 units AOA this changes to mild adverse yaw, therefore slight heading overswings will be encountered when rolling out of turns. The aircraft shows little roll due to rudder in the landing configuration and thus the rudder is useful for small heading adjustments. See Figure 2-8 for a typical landing pattern. For Landing Distance Data, refer to AER.1F-PA200- I A, Performance Data.

PRE-LANDING CHECKS

1. Wing sweep — 25°
2. -Airbrakes — IN and locked
3. SPILS — OFF
4. Rad. alt — Set bug to zero.
5. Fuel — Balance, quantity, calculate approach speed.

NOTE

Approach speed at 14000 kg, flaps DOWN:
10 units AOA, 140 kt.* plus 4 kt/ 1000 kg
12 units AOA, 132 kt.* plus 4 kt/1000 kg
* Add 3 kt if Krueger flap are inhibited

Approach speed at 14000 kg, flaps MID:
10 units AOA, 155 kt plus 5 kt/1000 kg
12 units AOA, 146 kt plus 5 kt/1000 kg

6. Flaps — MID

WARNING

DO NOT EXTEND THE LANDING GEAR WITH LD/TR PRESELECTED AS THE SPOILERS AND/OR TR BUCKETS MAY DEPLOY.

7. Landing gear — DOWN
8. Hook light — Out
9. Harnesses — Tight and locked
10. Landing gear — 3 greens, no reds
11. Brakes — Test, A SKID out
12. NWS — LOW light on, no re-ingest audio.
13. Flaps — As required.

For final landing:

14. Lift dump indicator — Blank/white cross
15. Left throttle — LD preselect.
16. Right throttle — TR preselect, if required

WARNING

- IF OL IS INDICATED, PRESELECTION OF LIFT DUMP AND THRUST REVERSE SHALL NOT BE MADE. A FAILURE OF THE OLEO MICROSWITCH EXISTS AND MAY CAUSE AIRBORNE DEPLOYEMENT OF THE THRUST REVERSE BUCKETS AND/OR EXTENSION OF SPOILERS.
- DO NOT PRESELECT TR IF REINGEST AUDIO SOUNDS WHEN LANDING GEAR IS LOWERED.
- AVOID REARWARD PRESSURE AGAINST IDLE STOPS WHEN ROCKING THROTTLES TO AVOID INADVERTENT ENGINE SHUT DOWN.

CAUTION

- AIRBRAKES SHALL NOT BE USED ON THE APPROACH IN CROSSWIND > 10 KT CARRYING LARGE STORES ON U/FUS PYLONS AS SLIGHT STICK LIGHTENING OR SLIGHT PITCH-UPS MAY OCCUR ABOVE 12 UNITS AOA.

- THE AIRBRAKES SHOULD BE RETRACTED PRIOR TO TOUCHDOWN TO AVOID DAMAGE TO THE AIRBRAKES WHEN REVERSE THRUST DEPLOYS DURING THE AIRBRAKE AUTORETRACTION PHASE.

Lower full flaps wing level on downwind (on final for straight-in). The buffet level with full flaps is noticeably higher than flaps at MID. Crosscheck computed final approach speed versus AOA, when on final.
For current AOA limits see Section V.
Thrust reverse and/or lift dump may be preselected after LG lowering on final approach or selected after touchdown by rocking the corresponding throttle outboard. The left throttle preselects or selects lift dump only. For TR preselection observe thrust reverse limitations in Section V. If the LIFT DUMP magnetic indicator shows blank/white cross, preselect TR on final approach and continue to modulate thrust by throttle movement. 85% NH shall not be exceeded over the threshold and during flare.
The flare should be smooth and initiated out of ground effect just prior to touchdown. The attitude change to achieve a round-out from descent to an acceptable touchdown sink rate is small, and changes in attitude and AOA will not result in a significant rise in drag or loss of speed. Rapid hard back stick inputs during flare should be avoided as the sink rate will initially be increased due to the effectiveness of the taileron.

engaged TR may be engaged if not preselected; when thrust reverse indicators show REV, TR may be applied. When increasing thrust above IDLE, the reversed jet airstream interfaces with the airflow over the fin rudder proportional to the amount of thrust applied. The NSAS counters this destabilizing influence by suppressing any yaw disturbance and provides good directional control. If steering corrections are necessary, large positive pedal deflections are required to overcome NSAS authority. Improved directional stability is achieved at high thrust settings as the nose down pitching moment increases NWS. The worst stability region is experienced in the mid thrust range (approx. 80% NH), where fin and rudder effectiveness is markedly reduced. Therefore, the recommended technique is to slam throttles from IDLE to MAX DRY to minimize the time in this unfavorable region. Light lateral oscillations which occur when full TR is selected may be ignored as they have no handling significance.
TR may be used down to re-ingest warning from 200 KIAS not exceeding 80% NH and/or from 165 KIAS using MAX DRY.

WARNING

ONCE ACTIVATED, LD AND TR SYSTEMS REMAIN ENGAGED BY HOLD-ON RELAYS EVEN IF THE AIRCRAFT BOUNCES AFTER TOUCH-DOWN. THE SYSTEM CAN ONLY BE CANCELLED BY ROCKING THE RESPECTIVE THROTTLE(S) INBOARD OR, IN THE TRAINER VERSION, BY SELECTING THE THRUST REVERSE SWITCH IN THE REAR COCKPIT TO OFF.

At the re-ingest warning (approximately 60 kt) retard throttles to IDLE TR and apply brake pressure. At normal taxi speed cancel TR and select TAXI NOZZLE. Prior to clearing the runway select nosewheel steering to HIGH.

NOTE

To avoid FOD cancel TR as soon as practicable.

CAUTION

- DESELECTION OF NWS VIA ICO MAY RESULT IN DIRECTIONAL CONTROL PROBLEMS WHEN IN TR. IN THIS CASE DESELECT TR IMMEDIATELY AND MAINTAIN DIRECTIONAL CONTROL BY USE OF RUDDER/ DIFFERENTIAL BRAKING.
- FOR LANDING WITH TR PRESELECTED, THE THROTTLES SHALL BE CHOPPED TO IDLE AT MAIN WHEEL TOUCHDOWN AND 'HIE NOSEWHEEL LOWERED ONTO THE RUNWAY WITHOUT DELAY TO AVOID STRUCTURAL DAMAGE TO THE NOSEWHEEL.
- FULL TR MAY BE USED IF AIR BRAKES ARE IN AND LOCKED. IF NOT LOCKED, TR SHALL BE USED AT IDLE ONLY.

NOTE

Exercise caution when deselecting TR, since any excessive rearward pressure on the throttle release latches may result in advertent engine shutdown

LANDING PATTERN (TYPICAL)

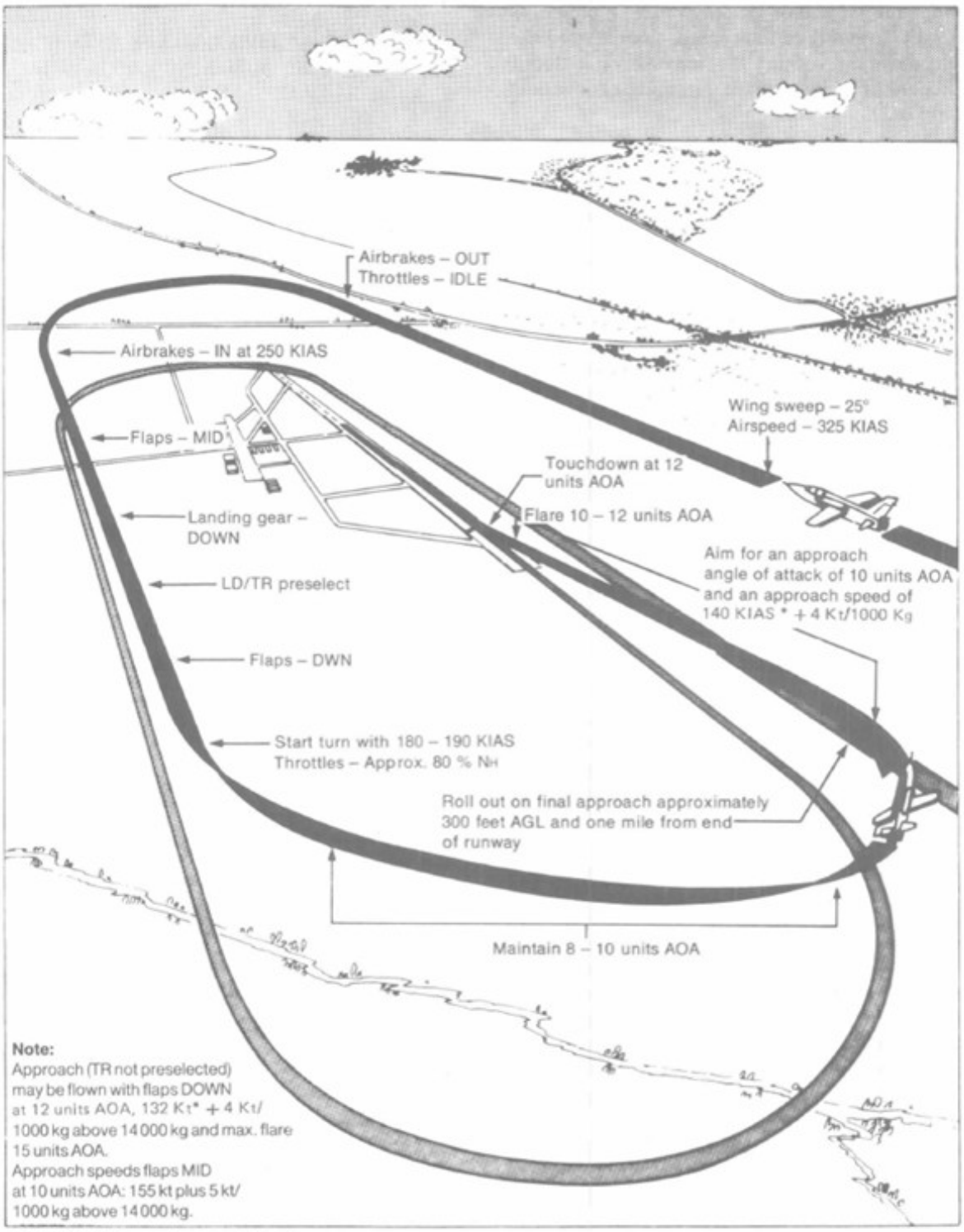

* Add 3 Kt if Krueger flaps are inibited

Figure 2-8

AFTER TOUCHDOWN CHECKS
At mainwheel touchdown reduce throttles to IDLE and lower the nosewheel gently onto the runway. If the NWS is

CROSSWIND LANDING

Preselect LD and fly a crabbed approach. TR may be used to the limits given in Section V of this manual. Under Turbulent conditions, involving the possibility of wind shear, 10 units AOA should not be exceeded to allow for sudden changes in airspeed and to maintain normal sink rate. At high crosswinds a combination of crabbed approach and low wing method is recommended. Prior to touchdown gently kick off drift in the conventional manner to minimize the lateral loads on the landing gear but maintain a certain drift angle proportional to the existing wing. As soon as either main wheel oleo is compressed, LD will deploy and keep the aircraft firmly on the ground. Lower the nosewheel without delay to ensure early NWS operation and select TR. Full spoiler roll control will be available and any tendency for the upwind wing to rise after touchdown can be corrected by applying roll control into the wind. High TR thrust settings will increase this phenomenon, but use of roll control should be avoided if possible as this will reduce LD effectiveness.
Further handling considerations as for normal landing apply.

BRAKING TECHNIQUE

AERODYNAMIC BRAKING

Aerodynamic braking is possible regardless of flap slat position. This technique should be applied if the thrust reverse cannot be used because a failure inhibits its operation for landing, or thrust reverse fails to deploy after touchdown, in cases of NWS failure or when landing with a known blown nosewheel tire.
When landing with a thrust reverser failure, plan to touchdown at the proper approach speed and AOA, near the front end of the runway and use its full length. Lift dump should be used, and the aircraft's nose kept up by continuously increasing back stick pressure to maintain 18 units AOA until the airspeed has dropped to approx. 100 kt. When carrying external stores the limit is 14 units AOA (for further information refer to Section V of this manual). Lower the nosewheel gently onto the runway, select TAXI NOZZLE and use maximum braking technique if necessary to slow the aircraft down to taxiing speed.
If thrust reverse fails after touchdown with the nosewheel lowered onto the runway, deselect TR, if preselected.

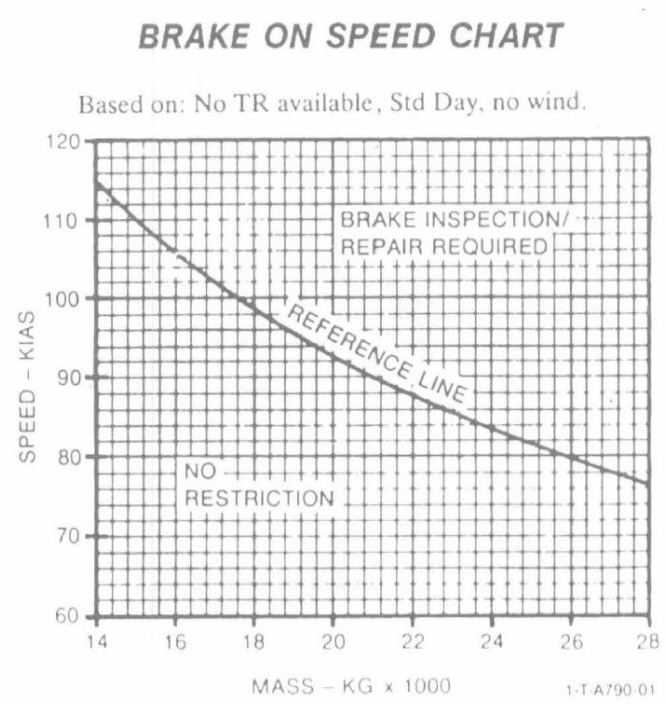

Speed and remaining runway are the dominant factors which determines whether to raise the nose and to apply the aerodynamic braking technique, or to continue the landing roll with TAXI NOZZLE selected and stick full aft.

NOTE
Below the Reference line damage of the wheel brakes is unlikely and routine brake checks are sufficient, Above the Reference Line, brake inspection/repair is required.

Under normal conditions speed will be too low to use aerodynamic braking effectively if TR failed after touchdown.
To avoid major damage to the brakes, the braking energy requirements should be kept as low as possible by:

- Observing limitations in Figure 2-9
- Keeping the total brake application time as short as possible (hard but short applications).
- Using LD or TAXI NOZZLE depending on situation.

CAUTION
DURING AERODYNAMIC BRAKING, TAIL SCRAPE MAY OCCUR BEYOND 19 UNITS AOA.

OPTIMUM BRAKING

Optimum braking is achieved by using full TR together with maximum wheel brake pedal pressure allowing the anti-skid system, which is fully adaptive, to give optimum braking and deceleration.
Wheel brakes may be applied, progressively up to full pedal pressure, 2 seconds after TR selection, and progressively applying full rearward stick pressure.

NOTE

Due to a current brake control system deficiency in the trainer version, full brake pressure will be achieved at the second brake application only.

TOUCH-AND-GO LANDING

After touchdown from normal approach maintain sufficient back stick pressure to hold the nosewheel off the ground.
Check airbrakes retracted and advance throttles smoothly to MAX DRY. At 140 KIAS minimum, rotate the aircraft to achieve 10 units AOA until the aircraft lifts off again. When safety airborne, raise the landing gear.
With the flaps selected in DWN, raise flaps to MID at calculated speed according to gross weight (155 + 5 kt per 1000 kg above 14000 kg) and after the landing gear has fully retracted.
Further raising of flaps to UP, if required, should be performed at 180 KIAS (+ 5 kt for each 1000 kg above 14000 kg).

WARNING

- FULL FLAP TOUCH AND GO LANDINGS WITH A KNOWN REHEAT FAILURE ON EITHER ENGINE ARE PROHIBITED.
- IN CASE OF AN ENGINE FAILURE AFTER LIFT OFF DEPENDING ON MASS, THE THRUST AVAILABLE ON ONE ENGINE IN MAX DRY MAY BE INSUFFICIENT TO CONTINUE THE CLIMB OUT, UNLESS THE PROCEDURE FOR ENGINE OR REHEAT FAIL-URE DURING TAKEOFF IN SECTION III OF THIS MAN-UAL IS APPLIED. FULL FLAPS, IF SELECTED, SHALL NOT BE RAISED BEFORE MINIMUM FLAP RETRACTION SPEED.

CAUTION

AT ROLLING SPEEDS ABOVE 80 KT, DEPENDING OK MASS, AOA AND CONFIGURATION, THE WOG SWITCHES MAY REACH THE FLIGHT CONDITION AND THE LG LEVER WILL NOT BE LOCKED DOWN, THUS THE LG LEVER COULD BE RAISED PREMATURELY.

GO AROUND

The decision to go around should be made as early as possible. When the decision is made, rock the throttles inboard to deselect LD/TR, if preselected; thereafter advance throttles to required power setting. As the aircraft accelerates, rotate the nose to a climbing attitude and when altimeter and VSI indicate a positive rate of climb, continue with after take-off checks. For a typical go-around pattern refer to Figure 2-10.

WARNING

DO NOT EXTEND OR RETRACT THE LANDING GEAR WITH THE LD/TR PRESELECTED

AFTER LANDING CHECKS

1. MASS — SAFE, LOCK
2. Land/taxi lights — As required.
3. IFF — OFF
4. Command ejection — REAR
5. CRPMD — M, INT
6. TFE- OFF
7. Pitot and NV/screen heaters — OFF K.
8. Flaps — As required.
9. Ignition (Engine control panel) — OFF

CAUTION

THE IGNITION SWITCH ON THE ECP SHALL BE SELECTED TO OFF TO PREVENT IGNITION OF THE RESIDUAL FUEL IN THE SHUT-DOWN ENGINE, SHOULD THE THROTTLE BE MOVED OUT OF THE HP SHUT POSITION.

GO-AROUND (TYPICAL)

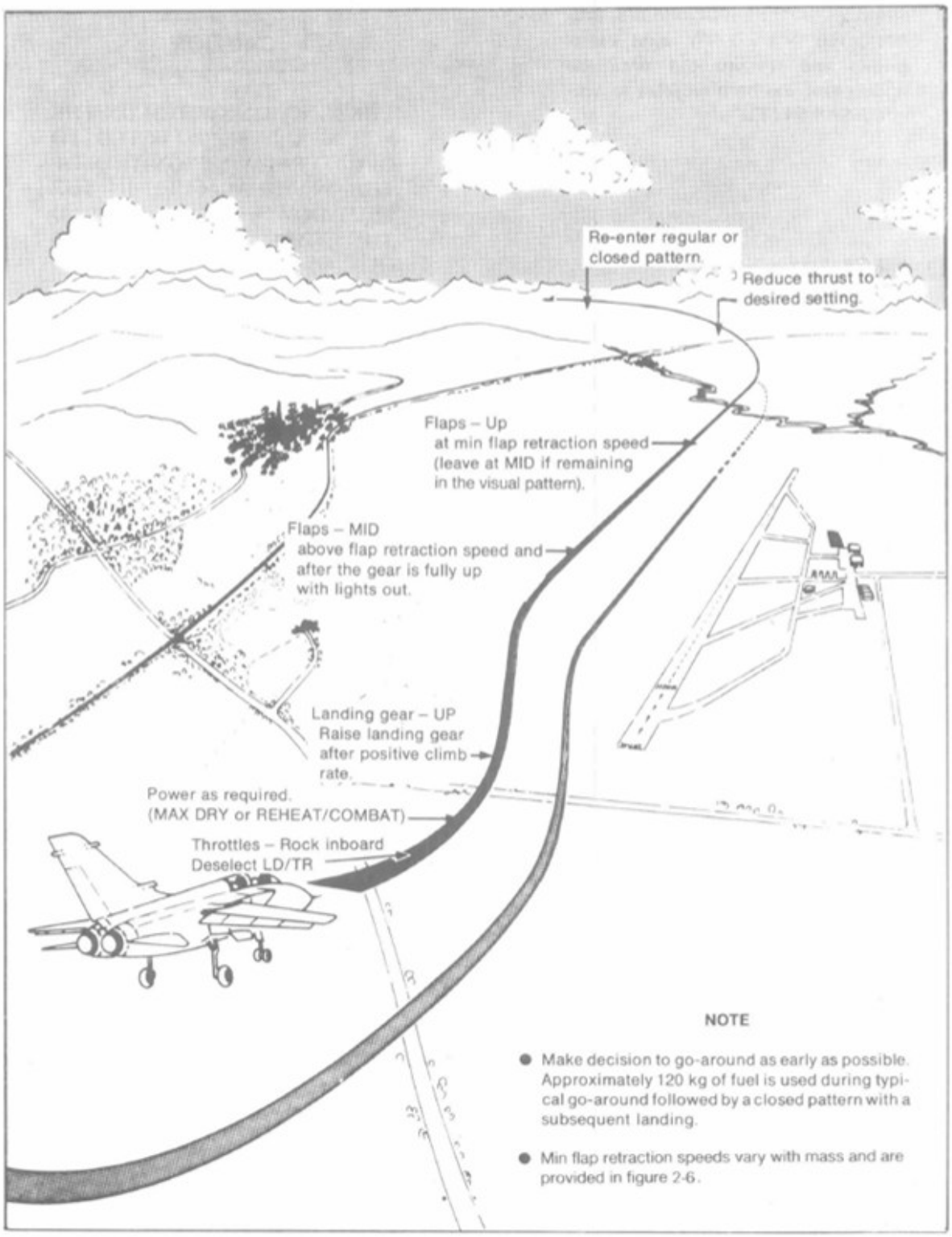

Figure 2-10

10. CWP — Test 1 + 2
11. For single engine taxi:
    TAXI nozzle — SHUT.
    X-drive — Ensure SHUT
    Either throttle — HP SHUT below 450°

Confirm that the X-drive is in AUTO prior to one engine shut down to maintain full electric and hydraulic service. Either engine can be shut down if desired, but T7 should be below 450°C. After running for a period at max continuous conditions or above it is advisable that the engine should be idled for 2 minutes before shutting down to allow cooling of the rotor system.

12. Pitch trim — Fully nose down
13. Intake anti-icing — OFF
14. PSP — Disconnect

SHUT DOWN CHECKS

CAUTION

FOLLOWING HEAVY BRAKE APPLICATION, ENGINE SHUT-DOWN SHOULD BE MADE WITH THE AIRCRAFT NOSE INTO WIND, TO AVOID ENGINE FUEL SPLASHING ONTO HOT BRAKES AND IGNITING. THE MAXIMUM TAILWIND COMPONENT IS 15 kt

Front Cockpit

1. Taxi light - OFF
2. EPS - OFF
3. Ejection seat, EPS and canopy pins - IN, confirm with nav

If entering shelter:

4. Wing sweep - 45°
5. NWS - Disengage, confirm with groundcrew.
6. Brakes - Release

When stationary:

7. Brake handle - Park
8. CMP - Recorded
9. RPMD - OFF
10. Rad alt - OFF
11. ESRRD - OFF
12. HUD - OFF
13. Tacan - OFF
14. Probe - OUT (if required)

The probe shall be inspected for cracks after each AAR operation, wet or dry.

When cleared to shut down:

15. Hydraulics - Left OFF, right AUTO.
16. X-drive clutch - OPEN
17. Taxy nozzle - SHUT.
18. Throttle(s) - HP SHUT, RPM decreasing.

WARNING

DO NOT SWITCH BATT MSTR TO OFF BEFORE THE THROTTLES OF BOTH ENGINES ARE IN HP SHUT AND RPM IS DECREASING AS OTHERWISE ENGINE CONTROL INCLUDING OVERSPEED GOVERNORS AND SHUTDOWN FACILITY ARE LOST THECONSEQUENCES WOULD BE THE SAME WITH A FAILED BATTERY, IF THE GENERATORS WERE SWACHED OFF PRIOR TO ENGINE SHUTDOWN.

19. Rapid T/O panel - All OFF except BATT MSTR

20. V/UHF/emerg radio - OFF
21. CVR - STOP
22. MASS - Key removed.
23. Brake handle - Normal (chocks in)

NOTE

Brake handle should be returned to NORMAL since after more 10 minutes with the brake handle in PARK, excessive distortion of wheel brake components will occur, with subsequent brake lock.

24. HUD camera - OFF, remove cassette.
25. ASM - OFF/RESET
26. External lights - OFF
27. Oxygen - OFF, check normal, emergency contents.
28. Canopy - Open
29. Battery master - OFF (engines stopped)
30. MDC pin – In

Rear Cockpit

1. Ejection seat pin - IN, confirm with pilot.

After CMP recorded:

2. TV/TAB - Both OFF
3. CRPMD - OFF
4. RWR OFF
5. ECM - OFF
6. Doppler - OFF
7. IN - OFF (align if required)
8. SAHR - OFF
9. MC control panel - All OFF
10. CVR - OFF, remove cassette.
11. HDDR - OFF, remove cassette.
12. Inform pilot clear to shut down.
13. Oxygen - OFF, check normal, emergency contents.
14. V/UHF - OFF
15. MDC pin – IN

SECTION III
INTEGRATED NAVIGATION AND WEAPON AIMING SYSTEM

INTRODUCTION

The integrated navigation and weapon aiming system enables the aircraft to be flown at high speed and low level in all weathers to deliver a variety of weapons. This chapter describes the equipment installed in the aircraft and their functions.
The various equipment in the navigation system perform one or more of the following functions: Sensing, Processing and Display.
The navigation and weapon aiming system is designed to increase mission effectiveness by using the information of the various equipment for steering the aircraft and for displaying and monitoring navigation and weapon aiming data.
The system consists of navigation sensor and display, which are controlled via the main computer.

SENSING

Navigation sensors which deliver data for processing are divided into: Autonomous, Forward and Downward Looking Sensors.
Autonomous Sensors

INERTIAL NAVIGATOR (IN)

The IN is the prime source of velocity, attitude, heading and position data and organizes navigation information for display on the Inertial Navigation Control and Display Unit (INCDU). It is the primary data source for the KALMAN FILTER, TFR and AFDS.

SECONDARY ATTITUDE AND HEADING REFERENCE (SAHR)

The SAHR as a gyroscopic platform provides aircraft heading and attitude data for reversionary navigation and attitude data for TFR and AFDS.

AIR DATA COMPUTER (ADC)

The ADC provides horizontal and height data to the avionic system which are derived from the pitot/static sensors, local angle of incidence, total temperature and barometric pressure reference inputs.

Forward Looking Sensors

GROUND MAPPING RADAR (GMR)

The GMR scans the terrain ahead of the aircraft for display of the resultant image on the Combined Radar Projected Map Display (CRPMD) and E-Scope Radar Repeater Display (ESRRD). In addition to ground mapping, the GMR includes modes for height finding, terrain avoidance, air-to-ground ranging, air-to-air track and lock-on. The GMR may be used to interrogate remote beacons.

TERRAIN FOLLOWING RADAR (TRF)

The TFR scan along the aircraft projected track and enables a preselected terrain clearance height to be accurately maintained. The elevation commands are supplied to the Flight Director (FD) and/or to the Autopilot (AP) and the terrain return is displayed on the E-Scope.

Downward Looking Sensors

DOPPLER NAVIGATION RADAR (DPLR)

The DPLR provides digital three axes velocity data by measuring the doppler shift of three radar beams reflecting off the ground. These velocity outputs are supplied to the MC. •

RADAR ALTIMETER (RA)

The RA provides a precise height read-out from ground level to 5000 feet AGL. Height information is fed to the AFDS, MC, HUD, and TFR.

PROCESSING

Main Computer (MC)

The MC system is the control center of the navigation and weapon aiming system. It processes incoming navigation sensor signals and refines certain inputs to provide optimal data management. These data are automatically presented on head-down and head-up display to enable the crew to monitor automatic system performance or to fly the aircraft manually.
An Operational Flight Program (OFP) is loaded into the MC from an external Ground Loader Unit (GLU-1) or via the RDE facility of the Cockpit Voice Recorder (CVR).

DISPLAYS AND CONTROLS

The results of MC processing and calculation and direct navigation system data are presented to both crewmembers via their respective cockpit displays. The parameters available depend on the selection made by each crewmember to initiate certain functions. and modes of the navigation and weapon aiming system.

Front Cockpit

HEAD-UP DISPLAY (HUD)

The HUD displays navigation and weapon aiming information in symbolic and digital form to the pilot, enabling him/her to navigate and carry out attacks. The HUD superimposes symbols onto the pilot's forward view of the outside world.

REPEATER PROJECTED MAP DISPLAY (RPMD)

The RPMD displays projected map data which can be selected by the pilot or as a repeat of the CRPMD to assist the pilot in navigation, reorientation and situation assessment.

E-SCOPE AND RADAR REPEATER DISPLAY (ESRRD)

The ESRRD is a dual format display that comprises a TF E-Scope display and a repeat of the navigator's radar display. The E-Scope function gives a general indication of TFR performance by showing a profile of the terrain ahead as seen by the TFR. The radar repeater display presents a duplicate image of that which is currently displayed on the navigator's GMR display.

HORIZONTAL SITUATION INDICATOR (HSI)

The HSI provides the pilot with a display of the aircraft's horizontal situation. It gives data on heading, track, and distance to go to the next destination.

PILOT'S HAND CONTROLLER (PHC)

The PHC controls the ranging reticle on the HUD during Phase 2 and 3 of sensor fixing and weapon aiming. During rapid HUD alignment of the IN, it assists with bearing information and also provides a slewing facility for the RPMD.

PILOT'S WAMS CONTROL PANEL (PWAMS)

The PWAMS enables the pilot to select Air-to-Air Guns (AAG) and Target of Opportunity (TOO) weapon aiming functions and to "insert" position data into the MC.

PILOT'S WAMS INDICATOR PANEL

The pilot's WAMS indicator panel provides indication of attack mode selection and missile ready status.

Rear Cockpit

TV/TABULAR DISPLAYS (TV/TABs)

The two TV/TAB units are computer terminals capable of displaying data in pictorial or tabular form. The tabulator keyboards enable the navigator to insert into, extract from, or change data in the computer or to program a mission.

COMBINED RADAR AND PROJECTED MAP DISPLAY (CRPMD)

The CRPMD provides facilities for navigation/target acquisition and navigation/attack data insertion. It presents GMR video, which may be optically combined with a projected topographical map together with selectable electronically generated symbols.
Digital read-outs of range, aircraft track, across track distance and antenna tilt angle are also displayed.

INERTIAL NAVIGATION CONTROL AND DISPLAY UNIT (INCDU)

The INCDU shows all navigation data directly sensed by the IN and processed by its own computer. Associated with the display is a keyboard, which enables navigation data to be inserted or changes as required.

NAVIGATION MODE CONTROL PANEL (NMCP)

The NMCP provides switching inputs via IFU 2 to the MC to select the required navigation and steering modes.

MAIN COMPUTER CONTROL PANEL (MCCP)

The MCCP provides power supply switching facilities to the MC, IFU 1, IFU 2 and Waveform Generator (WFG). It also gives an indication of program loading in process and of BITE failure detection.

NAVIGATOR'S WAMS CONTROL PANEL (NWAMS)

The NWAMS enables the navigator to select various weapon aiming functions.

NAVIGATOR'S HAND CONTROLLER (NHC)

The NHC enables navigational data to be inserted into the MC by changing map and computer marker position. It carries controls affecting GMR operation.

SENSING

INERTIAL NAVIGATOR (IN)

The IN is a self-contained navigation equipment providing the primary source of velocity, attitude, actual rack and heading data to the Avionic System. The equipment is also primary source of attitude data for the AFDS, GMR and TFR and in case of MC failure, the IN data are used directly by the HUD and HSI as indicated in figure.
The IN can store the coordinates of two destination and produce, on demand, steering information to either one.
The IN equipment comprises two units:

- Inertial Navigator Unit (INU) located in the forward equipment bay

- Inertial Navigator Control and Display Unit (INCDU)

Before the IN can be used, the inertial platform shall be aligned to the required vertical and azimuth datums. Four alignment methods are provided: normal, rapid inertial, rapid HUD and memorized heading. The method employed and subsequent accuracy obtained is dictated by the time available and other operating restrictions. When aligned, the IN equipment senses and processes changes of attitude and acceleration. The calculations necessary to derive useful data are carried out by a digital computer within the equipment. The INU transmits data to other equipment within the aircraft. A continuous and an interruptive BITE are provided.

NOTE for Microsoft Flight Simulator:

This MSFS rendition features a simplified INU and INCDU simulation, which is meant to simplify / reduce the procedures and the workload of the real-cockpit. Although most of the switches and controls are operational, the main restrictions and simplifications are:

– *1) IN alignment quality does not affect the current estimation of the present position, so that aircraft can be flown safely with any level of quality of the alignment.*

2) Present position and heading will always report the actual position and heading values of the aircraft in the sim, and you do not need to enter them to start the alignment procedure.

Inertial Navigator Unit (INU)

The INU contains the inertial platform which is gimbal supported and gyro-stabilized. The IN platform is referened to true north and the local vertical axis, and senses accelerations measured by three accelerometers. They are mounted such that two accelerometers respond to N-S, E-W accelerations in the horizontal plane and the third detects vertical accelerations. Synchros mounted on the gimbal axes provide attitude signals in inclination, roll and heading. This attitude position information is integrated with velocity signals and then fed to the MC for navigation and weapon aiming calculations.

Inertial platform data are processed by the IN computer for horizontal and vertical channel calculations which are passed as navigation information for display on the INCDU. These processed data are also the prime source for the MC, AFDS, GMR, TFR, HUD and HSI (figure).
In addition, the IN computer" processes the information required for HUD alignment of the platform and has the capability of storing the coordinates of two reversionary destinations (D31 and D32) and producing on demand steering information to the selected destination.

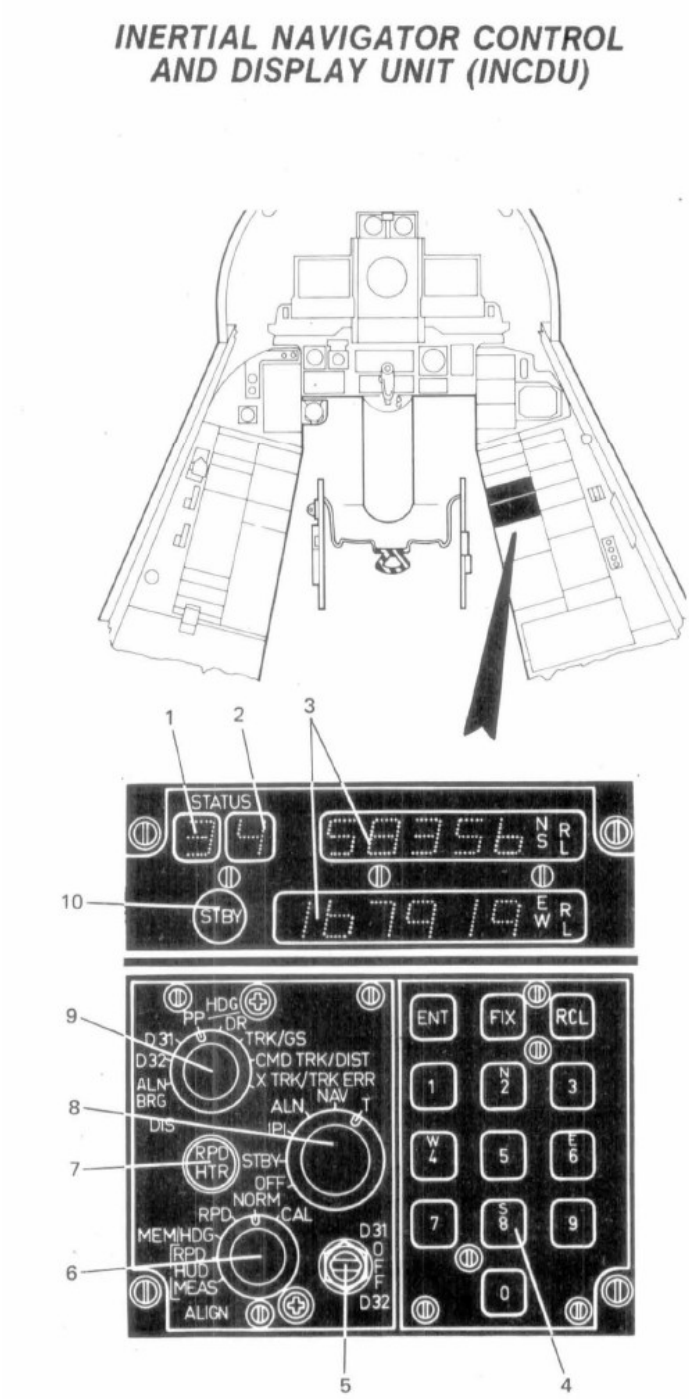

1 LH (alignment) status indicator
2 RH (fault) status indicator
3 Navigation display
4 Keyboard
5 Destination selector switch
6 Align selector knob
7 Rapid heaters indicator
8 Mode selector knob
9 Display knob
10 Standby lamp

Inertial Navigator Control and Display Unit (INCDU)
The INCDU provides various controls and display for manual selection of the operating modes and various types of alignment and display. Refer to figure.

STANDBY INDICATOR LAMP

The amber STBY lamp is constantly illuminated when STBY mode is selected and platform cluster temperature is above + 5° C. Below + 5° C the lamp flashes at a rate of approximately once every second.

STATUS INDICATOR

The two-digit STATUS alpha/numerical indicator shows ALN and FIX, TEST, IPI status (LH digit), and fault status (RH digit). The LH STATUS flashes in the IPI and ALN mode when the platform temperature is below + 5° C. For status indication interpretation refer to figure.

NAVIGATION DISPLAY

The navigation display consists of two digital displays for stored or computed data. The upper display numerical has a five-digit read-out with N, S, R or L, the lower panel a six digit read-out E, W, R or L direction indicators. Displayed data are selected by the display selector switch. Refer to figure.

KEYBOARD

The ten-digit pushbutton keyboard with associated FIX, Recall (RCL), and Enter (ENT) buttons for data insertion is used in conjunction with the display selector switch and the navigation display. Even numbered buttons have direction annotation N, W, E and S in addition to numbers.

DESTINATION SELECTOR SWITCH

The three position OFF/D31/D32 toggle switch is used to derive IN steering information.
Positions D31 and D32 permit steering information relating to alternative destinations to be displayed on the navigation display when CMD TRK/DIST or TRK/TRK ERR is selected in IPI, ALN or NAV mode. Outputs are fed to the HSI and HUD for display in the case of MC failure.
In the OFF position alternative information is deselected.

ALIGN SELECTOR KNOB

The six-position rotary ALIGN knob is used to select the following IN alignment methods or functions:

CAL For calibration purpose by ground crew only.

NORM Normal alignment.

RPD Rapid inertial alignment.

MEM HDG Memorized heading alignment.

RPD HUD Rapid HUD bearing alignment by reference to the stored data from HUD MEAS.

HUD MEANS HUD measurement and storage of bearing.

RAPID HEATERS INDICATOR LAMP

The RPD HTR indicator illuminates steadily while rapid heating is in progress.

MODE SELECTOR KNOB

The six-position rotary knob is used for selection of the following modes:

OFF All power supplies are disconnected from the IN circuits.

STBY Power is supplied to the fine heaters to maintain the IN platform at its operating temperature of + 55° C for at least 4 hours.

IPI Initial Position Insertion: power is supplied to the complete IN equipment and interruptive BITE is initiated.

ALN Used in conjunction with the ALIGN selector knob to establish the vertical and azimuth datums. The alignment procedure is automatically inhibited until the platform temperature is above + 5° C.

NAV Normal in-flight operating mode on completion of alignment, before the aircraft is moved.

T Test mode used only by ground personnel in conjunction with the CAL position of the ALIGN selector knob.

The knob position NAV and T are detend to prevent inadvertent operation.

DISPLAY SELECTOR KNOB

The eight-position rotary knob labelled DIS controls the navigation displays as follows:

ALN BRG Stored bearing for HUD alignment is displayed on the five-digit indicator.

D31 Latitude and longitude data of the first destination can be displayed when inserted or changed.

D32 Identical to D31 but used for the second destination.

PP Present Position (PP) in lat/long is displayed as inserted in IPI or computed in NAV mode.

HDG/DR In IPI mode, reference heading for alignment is displayed. During NORM and RPD alignment the sensed heading is displayed. In NAV mode true heading is displayed on the upper and drift angle above 50 kts GS is displayed on the lower display.

TRK/GS Actual track is displayed on the upper, groundspeed on the lower display.

CMD TRK/DIS Track (on the upper) and distance (on the lower display) to the destination D31/D32 are displayed.

X TRK/TRK ERR Across track distance (on the upper) and track angle error (on the lower display) to the commanded track are displayed.
For details of the display, refer to figure.

IN STATUS FAIL/ALIGN INDICATION

MODE	INDICATOR		INTERPRETATION
	LEFT	RIGHT	
FIX	9		
TEST	8		
IPI	7	U	Fault — ADC fault
		9	Fault — Internal power supply
		8	Fault — IN computer
		7	Fault — Data stores
		6	Fault — Input/output circuits
		5	Fault — INCDU
		4	Fault — Attitude
		blank	Fault — External power supply
			BITE successful
			All faults, recycle mode OFF/IPI
			ALN may not select with fault indicated
ALN	6		Coarse alignment in progress
	5		Fine alignment in progress
	4		Very poor alignment (6 nm)**
	3		Poor alignment* (3 nm)**
	2		Fair alignment* (1.5 nm)**
	1		Good alignment* (1 nm)**
	0		Very good alignment* (<1 nm)**
		U	ADC fault or vertical channel out of limits
			If U disappears by status 0, system OK
			If U still present at status 0, monitor behaviour at NAV selection
		9, 8, 6	As above. Attempt re-align
		5, 1	As above. Attempt re-align
		4	Fault — Attitude, may not coarse align
		3	Fault — Platform interface. IN will function but vertical channel degraded
		2	Fault — Platform services. Bad coarse align, may auto switch off
			If 2 disappears, system probably OK
NAV	blank		System OK
	not blank		NAV selection rejected, aircraft shall not be moved
		U	ADC fault. If U disappears at NAV selection then vertical channel is out of limits. Confirm on HUD
			RE-ALIGN
		9, 8, 6	As above. No confidence in IN data
		5, 4, 2, 1	As above. No confidence in IN data

* Applies to NRM/RPD inertial alignments only

** Average values for NRM alignment after 1 hour of flight

DISPLAYED DATA

DISPLAY SELECTOR POSITION	DATA DISPLAYED		LEAST SIGNIFICANT DIGIT	DATA INSERTED OR UPDATED
P.P.	U	Latitude Co-ordinates of Present Position	0.1 minutes	Can be inserted or updated only in the IPI mode or the NAV mode when FIX button is pressed
	L	Longitude Co-ordinates of Present	0.1 minutes	
D31	U	Latitude Co-ordinates of Destination 31	0.1 minutes	Can be inserted or changed during any mode of operation except OFF and STBY
	L	Longitude Co-ordinated of Destination 31	0.1 minutes	
D32	U	Latitude Co-ordinates of Destination 32	0.1 minutes	Can be inserted or changed during any mode of operation except OFF and STBY
	L	Longitude Co-ordinated of Destination 32	0.1 minutes	
HDG/DR	U	True Heading	0.1 degrees	Can be inserted only during IPI mode
	L	Drift Angle (zero if IN GS less than 50 kt, blank if MEM/HDG selected	0.1 degrees	Cannot be inserted or updated
TRK/GS	U	Present Track Angle	0.1 degrees	Cannot be inserted or updated
	L	Ground Speed	0.1 knots	
CMD TRK/ DIST	U	Command Track to selected destination	0.1 degrees	Displayed data is referenced to D31/D32 If D31/OFF/D32 switch is OFF, display is blank. Cannot be inserted or updated
	L	Distance To Go to selected destination	0.1 naut. miles	
X TRK/ TRF ERR	U	Across Track Distance	0.1 naut. miles	
	L	Track Angle Error	0.1 degrees	
ALN BRG	U	Align Bearing (Stored Bearing for Rapid HUD Alignments)	0.1 degrees	Can be inserted or updated only when in ALN Mode with RPD HUD Alignment selected
	L	Blank	N/A	

NOTE

"U" indicated data displayed on five digit (Upper) panel.
"L" indicates data displayed on six digit (Lower) panel.

Central Warning Panel

IN CAPTION

Illumination of the amber IN caption on the rear CWP indicates a failure in the IN equipment or that the system is switched off.

IN OPERATION

The IN equipment is switched on by selecting the mode selector knob either to IPI, ALN or NAV. In STBY position, the heaters are powered and maintain the platform at its correct operating temperature. IPI, ALN and NAV are three operating modes, with IPI selected, insertion of initial present position is provided and BITE is initiated.
Alignments
Four methods of alignment are available:

- Normal alignment
- Rapid inertial alignment
- Memorized heading alignment
- Rapid HUD alignment

NOTE for Microsoft Flight Simulator:

In the simulation, present position and heading will always report the actual position and heading values of the aircraft in the sim, and you do not need to enter them to start the alignment procedure. Information in this chapter is provided for educational purposes only.

The alignments require different set ups, have certain temperature restrictions and result in different IN performance. In the NAV phase, the IN functions are always the same; the gyros then run at a rate of approx. 22000 rpm, and the operating temperature is + 55° C. This temperature is achieved by RPD heating, at a rate of 15° C per min, and is initially sustained by normal heating. All temperatures mentioned here are IN-cluster temperatures and there is no direct indication of them.
Throughout all type of alignments, the RH STATUS indication should be blank, only STATUS 1 may be accepted. For other RH indications realignment should be tried after cycling the Mode selector switch through OFF. Once ALN has been selected the gyros need about 5 min run-down time after switch-off. Although ALN can be reselected before this time has elapsed, alignment will not start. This is indicated by a LH STATUS 7.

NOTE

- During all alignments the aircraft shall not be moved.
- Destination selector switch shall be in OFF.

In gusty conditions or at other times when the airframe may be disturbed during alignment, STATUS 0 may not be achieved. In such condition the status number may vary. Selection of NAV should be made when the lowest number of STATUS is indicated.
For all methods of alignment, the IN has to be provided with present position coordinates and actual true heading of the aircraft in the IPI mode.

IN Malfunction

ADC FAILURE

In NAV the IN system receives pressure altitude data from the Air Data Computer to correct the internally sensed movement along the vertical axes. Loss of this data significantly degrades the IN computer outputs of vertical velocity and incidence to the HUD and TER. These errors increase with time.
This failure is indicated by RH STATUS U and ADC fail caption on the CWP and by the status identifier 31/32/34/35/36 or 30/37 on the TV/TAB. Realignment of IN during flight is not possible.

CAUTION

FOR 5 MINUTES, AFTER THE INU IS SWITCHED OFF, THE AIRCRAFT SHOULD NOT BE HEAVILY MANEUVERED BE-CAUSE OF GYRO RUN-DOWN.

IN Failure

In case of failure which can cause platform damage (i.e., servo failure) the equipment will shut down automatically (IN fault). In this case no fault location is indicated.
IN failure is indicated on the rear CWP by the illumination of the amber IN caption. In this case there will be no outputs to the MC and the MC selects the best available NAV MODE. MAIN and IN captions on the NMCP are extinguished and the I symbol on the TV/TAB is occulted.
Other equipment affected by an IN failure are:

TFR TF MON caption illuminated on the front CWP and HT FAIL lamp illuminated on the TFR CP.

AFDS ATTD FAIL lamp illuminated on the AFDS CP and amber AP MON on the front CWP.

HUD Loss of attitude, vertical velocity and cross track error displays in the DIR mode.

HSI True heading, track and across track error displays are lost.

SECONDARY ATTITUDE AND HEADING REFERENCE SYSTEM (SAHR)

The SAHR is primarily used to provide attitude monitoring in terrain following. Its secondary function (in conjunction with the Doppler and the MC) is to provide attitude and heading data for reversionary navigation and weapon aiming in the event of an IN failure. The system supplies magnetic and true heading with the local magnetic variation set on the control and remote compensator unit. The SAHR supplies true heading and attitude information to the MC and AFDS. Attitude data only are supplied to the GMR and the TFR. The IN (for initial IPI selection) and the HUD are supplied with true heading, but additional magnetic variation is supplied only to the HUD. Magnetic heading is supplied via the IFU 1, to the HSI in certain modes (see figure).
The SAHR contains continuous and interruptive BITE. The interruptive BITE is activated when the MODE knob is set to TEST. Faults are indicated on the SAHR control panel and on the rear CWP. The system comprises the Control and Remote Compensator Unit (CRCU) the Gyro and Electronics Unit (GEU) and the Magnetic Detector Unit (MDU).

NOTE for Microsoft Flight Simulator:

SAHR system simulation in MSFS is very basic and its controls and functionalities are limited. While it is required that the player powers up and operate the system, the function is mostly limited to displaying the different heading values calculated in the sim.

Magnetic Detector Unit (MDU)
The MDU at the top of the tail fin, contains detector coils which measure the earth's magnetic field. The horizontal component is used to provide compass heading information. The vertical component is used in conjunction with compensation terms from the MC, to provide compensation of detector error caused by Coriolis and centripetal acceleration effects.

SAHR Control and Remote Compensator Unit (CRCU)

The CRCU is located in the rear cockpit (figure). The controls and indicators provide test and fail indication, heading slew control, true heading/magnetic variation read-out, indication of
fast erection- and synchronization, and magnetic variation setting. The remote compensator is used to correct compass system errors.

TRUE HEADING/VAR DISPLAY

The four-digit TRUE HDG/VAR numerical display has two modes of operation as follows:

TRUE HDG This is the normal display mode which is present on the digital display after alignment and Fast Erect Synchronization (FES) are completed. True heading is displayed in degrees and tenths of a degree.

VAR The display of magnetic variation is actuated by pressing the variation control (upon releasing the control, the display returns to true heading). Magnetic variation is displayed as a four-digit readout with a tenth of a degree

accuracy and with the relevant indication of E (East) or W (West) illuminated.

VARIATION CONTROL KNOB

Being pressed, the rotary W-E variation control knob sets magnetic variation for conversion of true and magnetic heading. The control setting has a range from 180 degrees W to 180 degrees E.

SLEW CONTROL KNOB

The rotary SLEW knob is spring loaded to the centre position. It shall be pressed and turned to the right to increase, and turned to the left to decrease the true heading indication, with a rate of change of 0.5°/sec.

FAST ERECT SYNCHRO INDICATOR

The amber FAST ERECT SYNC caption is illuminated during the warm-up and alignment phase in any mode other than COMP. When the caption extinguishes the equipment is ready to be used.

TEST/FAIL INDICATORS

Illumination of the upper white TEST caption indicates an interruptive BITE sequence, selected via TEST mode. The extinguishing of the TEST caption indicates successful completion of the test. The lower amber FAIL caption indicates equipment malfunction detected either during normal operation or during an interruptive BITE test.

MODE SELECTOR KNOB

The five-position rotary MODE knob controls three operating modes. Knob positions are marked and function as follows:

OFF All power supplies to the equipment are switched off.

TEST The interruptive BITE sequence is initiated, indicated by illumination of the TEST light.

SLAVE Platform is slaved to the earth's magnetic field and is corrected for earth rate, aircraft rate and magnetic variation, and is gyro stabilized. The slaving loop rate is 12 deg/hours.

FREE The MDU output is disconnected from the slaving loop and platform alignment is dependent on correction for earth rate, aircraft rate and magnetic variation and is gyro stabilized. The SLEW control shall be used to set true heading according to the indication of any reliable source (true heading from the IN inflight).

COMP True heading information is derived from the earth's magnetic field (via MDU) and corrected for magnetic variation but not gyro stabilized.

The switch movement is so arranged that, when either SLAVE or FREE is selected, it shall be pressed to select TEST or COMP. When the knob is in COMP mode, to select another mode, it is necessary to recycle the knob through the OFF position.

Central Warning Panel

SAHR CAPTION

The amber SAHR caption on the rear CWP illuminates to indicate a SAHR failure.

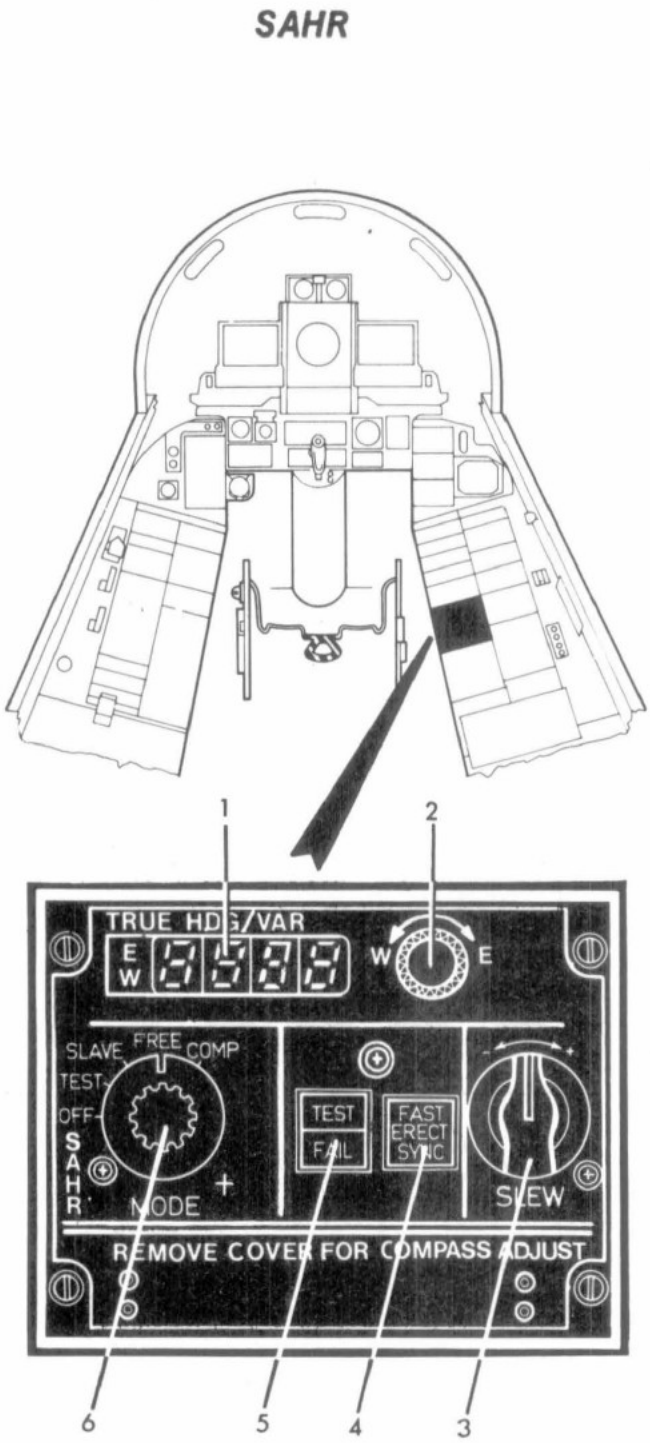

1 True heading/variation display
2 Variation control knob
3 Slew control knob
4 Fast erect sync indicator
5 Test/fail indicator
6 Mode selector knob

SAHR OPERATION

Alignment

The SAHR equipment is aligned by setting the MODE selector knob to FREE (or SLAVE); the MC shall be on and present position be inserted to provide the SAHR with accurate compensation terms. The FES caption illuminates, the equipment enters a BITE phase and the TRUE HDG/VAR readout display all 8's for approximately 4 seconds. Thereafter true heading is displayed. The local magnetic variation is checked and set if necessary, by pressing the variation control, 10 seconds after the selection of SLAVE, FREE or COMP, the SAHR provides a BATH output for initial coarse alignment of the INU platform. The alignment sequence duration is between 2 and 5 minutes depending on the outside ambient temperature. On completion of the alignment sequence, the EES caption is extinguished and the availability of AD + SR and, with Doppler engaged, DP + SR mode is indicated on the NMCP.

NOTE

For shelter operation SAHR may fail and require realignment outside.

NOTE for Microsoft Flight Simulator:

SAHR system simulation in MSFS is very basic and the system acts basically as a display for the various heading data implemented in Microsoft Flight Simulator.

In Flight

FREE (and SLAVE) are the normal modes of operation, with COMP as reversionary mode being selected when either the Doppler and ADC, the SAHR platform, or the MC have failed. In the COMP mode deviations of ± 2° in straight and level flight and ± 20° in turns are possible. The FREE mode does not use the MDU heading output and is therefore the preferred mode. If the FREE mode is used for longer flight periods, the TRUE HDG readout should be corrected at least every 40 minutes by slewing to IN heading.

Bite

AIR DATA COMPUTER (ADC)

The ADC, located in the forward equipment bay, is a digital computer which provides data to the MC, the IN, the HUD and AFDS.
To adjust the barometric pressure reference, an input is provided from the HUD control panel. Input data are continuously processed to solve the necessary navigation air data equation for providing calibrated airspeed, Mach number, pressure altitude, angle of attack, and true airspeed.

NOTE for Microsoft Flight Simulator:

The Air Data System simulation is limited to the default MSFS functionalities.

Limitations

The system performs satisfactorily within maximum operational ceiling up to 70000 ft with a temperature range of -50 degrees C to + 160 degrees C and an AOA range of - 10° to + 25°.

Central Warning Panel

ADC CAPTION

Failures in the ADC system will be indicated by the illumination of the amber caption ADC on the rear CWP.

ADC OPERATION

The barometric pressure (QNH) is set into the computer by the millibar setting knob, labelled MB SET, on the HUD control panel.

ADC Failure

If the ADC fails the amber caption ADC will illuminate on the CWP, also the failure will be indicated on the TV/TAB and HUD. Indication of speed, AOA, and barometric altitude will still be available from the secondary pitot-static system. The altimeter in the front cockpit will automatically revert to the STBY mode.

GROUND MAPPING RADAR (GMR)

The GMR transmits a pulsed beam of microwave energy while scanning a sector of the terrain ahead and below the aircraft. Signals returns are processed and routed to a Digital Scan Converter (DSC) which. produces a plan range video map, converted into a digital TV raster format and routed as synthetic video to the Combined Radar and Projected Map Display (CRPMD).
In conjunction with the IN and SAHR, the MC provides the GMR with aircraft attitude, heading and velocity (VN, VE) data which are used with antenna position data and transmission range, depending on mode selection, to calculate target angles, angle rates, range and range rates.
The equipment provides a continuous BITE, monitoring its correct functioning during all modes, and an interruptive BITE.
For GMR interface with the Navigation and Weapon Aiming System see figure.

Transmitter Unit

The transmitter unit amplifies the RF signals from the exciter/pulse compressor unit and feeds high power microwave pulses to the antenna. When TEST is selected the RF pulses are routed within the transmitter to a dummy load to dissipate the available power.

Antenna/Receiver Unit

The antenna unit contains a four-lobe slotted waveguide array and is roll stabilized to a maximum of ± 55° bank. The receiver unit processes the RF energy sensed by the antenna, converts it to an IF-frequency and feeds it to the exciter, processor/computer for target tracking or display. It contains the antenna control interface circuits which drive the azimuth and elevation gimbals to produce antenna scan patterns.

Exciter/Pulse Compressor

The exciter/pulse compressor unit provides low power RE-signals, chirped or non chirped trigger pulse for the transmitter, gate control signals for the receiver, an RE test pulse for the receiver BITE, and a pulse compression for the receiver signals.

Radar Mount/Roll Unit

The radar mount unit provides the interface be-tween the radar system and the aircraft and mounting for all radar units other than the antenna/receiver units. The radar roll unit provides mounting for the antenna/receiver units and contain the flexible cables, hydraulic and microwave rotary joints, required between the stationary units and the roll stabilized units.

Processor/Computer

The processor/computer unit contains the GMR computer which controls all operation by calculating target angles, angle rates, range, and range rates. Also, video processing is carried out, and the unit controls the antenna scan pattern, BITE operation and power distribution to other units.

Power Supply Unit

The power supply unit, which is common to both TFR and GMR, contains the low voltage DC power supplies, knobing and control circuitry.

Central Warning Panel

GMR CAPTION

The amber GMR caption on the rear CWP illuminates to indicate that the GMR equipment is either in a failed condition (e.g., input power, dynamic loop, input data) or the source data are not available. It will also illuminate when 55° angle of bank is exceeded.

NOTE for Microsoft Flight Simulator:

The GMR implementation in MSFS is very simple and most of the controls are INOP.

GMR FAIL INDICATOR

The amber GMR FAIL indicator on the CRPMD illuminates to indicate that the GMR equipment is in a failed condition.
In addition, NO GO is displayed on the MRCP if LRU BITE detects a fail condition.

GMR Malfunctions

Refer to CRPMD/RPMD malfunctions.

COMBINED RADAR AND PROJECTED MAP DISPLAY (CRPMD)

The CRPMD (see figure) is located centrally at the top of the rear cockpit and consists of an Advanced -Radar Display (ARD) and of a Projected Map Display (PMD) of which the image can be optically combined, together with electronically generated symbols.
An extension visor may be fitted to eliminate extraneous reflected light.
Radar signal returns are processed and routed to the Digital Scan Converter (DSC) which converts analogue plan range video into a digital TV raster format. Also generated electronic symbols as synthetic video are routed to the CRPMD for display. Slant-to-plan range correction is applied to provide accurate radar video (projected map registration). A microprocessor provides memory, timing, symbol positioning, and controlling.
Radar and synthetic video are routed from the CRPMD to the Head Down Display Recorder (HDDR) for subsequent analysis.
The map is optically projected from a film and positioned by command of the MC. A similar moving topographical map is displayed by the Repeater Projected Map Display (RPMD) on which instead of radar and synthetic video, static symbols are represented.

Digital Scan Converter (DSC)

The DSC, located in the forward equipment compartment, converts the GMR low refresh-rate analogue radar video into a digital, high refresh-rate, 625-line, 50 Hz TV raster format for display by the CRPMD. Slant-to-plan range correction is applied to provide accurate radar video/projected map registration. The control and computing centre of the DSC is Micro Processor Unit (MPU) which provides memory, timing, control and calculates symbol positioning. A storage facility enables the radar video to be held as long as necessary. The MC provides aircraft velocity, heading and cleared height data for use in the MPU. Mode and control data is received from the CRPMD. BITE monitors operational functions of the DSC and provides fail indications and a test-mode presentation.

Advanced Radar Display

The ARD uses the DSC TV video and format control data to produce a PPI sector scan or a B scan raster display on a high-brightness, short-persistence CRT. Geometry correction is applied to the CRT drive circuits to eliminate video distortion caused by the flat screen of the CRT. Contrast and brightness controls on the face of the CRPMD modify the video characteristics to provide the required display. BITE monitors the video processing circuits and the CRT drive to provide a fail/safe indication.

Project Map Display

A coloured topographical map is optically projected from film and positioned by data from the MC. One of three 50W tungsten-halogen projection lamps il-luminates a small area of the film and projects the image onto a vibrating screen. The vibrating screen improves the clarity of the picture by removing the displayed graininess of the film. A neutral density filter is placed in the projected light path when the HIGH/LOW switch on the CRPMD is set to LOW. If the in-use projection lamp fails, one of two spare lamps automatically replaces it.

COMBINED DISPLAY

The map-display image formed on the vibration screen is optically superimposed with TV video on a combining mirror. The combined image is viewed through a transfer lens via a files lens which permits a good quality image to be seen. Light reflection from the curved surface of the field lens are suppressed by a polarized screen.

DIGITAL READOUTS

Digital readouts of range, across-track distance, antenna tilt angle and aircraft track are displayed on the face of the CRPMD above the viewing port. The digital readouts are also used to indicate the results of a self-test program.

REPEATER PROJECTED MAP DISPLAY (RPMD)

The RPMD (see figure) located centrally on the front cockpit main instrument panel, displays a coloured, topographical map which is optical projected from film and controlled by data from the MC. The display (magnified 50% to compensate for the difference in cockpit viewing distance) can be a repeat of the CRPMD map or an independently positioned map, as selected. One of three 50 W tungsten-halogen projection lamps illuminates a small area of the film and projects the image onto a 3-layer viewing screen consisting of the following elements:

1. A Fresnel lens which converts the light-cone output from the projection lens into a light cylinder in the plane

of the operator's eye da-tum.
2. A scattering screen upon which a viewable im-age is formed. The screen eliminates any hot spots towards the centre of the image and image degradation towards the circumference of the display screen.
3. A polarized filter which eliminates image-obscuring reflection from both inside and out-side the RMPD.

For CRPMD/RPMD interfaces see figure.

NOTE for Microsoft Flight Simulator:

The CRPMD and RPMD maps in MSFS do not include a simulation or emulation of the flim projection and its mechanism and will use the standard MSFS mapping service – therefore the whole world is covered.

GMR CONTROLS AND INDICATORS

Mapping Radar Control Panel (MRCP)

NOTE for Microsoft Flight Simulator:

All MRCP controls are clickable but are basically INOP in the initial release of the Tornado for MSFS. Information in this paragraph is provided for educational purposes only.

The MRCP (see figure) is located in the rear cockpit, on the left console, and carries the following controls and indicators:

FREQUENCY PATTERN SELECTOR

The two position FREQ AGTY/FIXED FREQ switch selects the transmitter/receiver frequency pattern.
With FREQ AGTY selected, the frequency of each pulse is set to a random value within a fixed band to reduce the risk of jamming in a hostile environment.
When FIXED FREQ is selected, a fixed frequency is transmitted.

TEST PUSHBUTTON/INDICATOR

The TEST/NO GO pushbutton/indicator is pressed to initiate interruptive BITE with the white TEST and GMR/CWP caption illuminating (the TEST can be cancelled, and the caption extinguished by pressing the pushbutton a second time or by selecting a higher priority mode during test). After 45 sec test sequence period the caption extinguishes. The NO GO caption illuminates amber when a fault is detected, indicating internal or external failures of the radar. The TEST mode can be entered from M + S, M + R, or R mode on the CRPMD.

TILT SWITCH AND THUMBWHEEL

A 2-position AUTO/MAN switch selects the GMR antenna elevation tilt control mode.
In the STAB mode with AUTO and PENCIL selected, the tilt angle is controlled by MC elevation data.
With MAN selected, the tilt angle is controlled from the ELEV TILT — UP/DOWN thumbwheel to vary the elevation angle between 30° above (maximum UP setting) and 45° below (maximum DOWN setting) the radar boresight. The elevation angle is continuously displayed by the CRPMD TILT readout when M + R or R is selected at the CRPMD. The ELEV TILT thumbwheel can be used at any time to reset the area of look of the GMR and when released, the auto function will track about the new datum.

SENSITIVITY TIME CONTROL

A 5-position STC control, with settings 1 (minimum gain) to 5 (maximum gain), adjusts the GMR receiver gain during ground mapping. This maintains a constant video amplitude for varying levels of signal returns caused by changes in range.

SCAN RATE SELECTOR SWITCH

The two position FAST/SLOW SCAN toggle knob is used to select the antenna scanning rate. With the selection of FAST (only effective with 30/45/60° scan) the antenna scans at a rate of 90°/sec in azimuth and with the selection of SLOW at a rate of 30°/sec.
With TA selected the scanning rate is fixed to 90°/sec.

SCAN WIDTH CONTROL KNOB

The six position SCAN WIDTH rotary switch numbered 5, 10, 15, 30, 45 and 60, is used to select the required azimuth scan width angle relative to the track or to the azimuth center line as directed by the NHC switch.
The total azimuth sweep is twice the selected scan width.

NOTE

- When switching from one position to another, a pause of approx. 1 sec has to be made between to prevent a false fail indication on the CMP.
- When SCAN WIDTH 60 is selected GMR cannot be track stabilized.

BEAM SHAPE SELECTOR SWITCH

The two position PENCIL/SPOIL toggle switch is used to select one of the two radar beam shapes, depending on the operating mode. A selection of PENCIL produces a narrow beam, e.g., normally used in low level navigation updating and target acquisition.
When SPOIL is selected, the beam is changed to a shape suitable for use at medium and high flight level enroute navigation in ground mapping modes. It is optimized for 10000 Ft and 40 NM range.

INTERMEDIATE FREQUENCY GAIN CONTROL

The IF GAIN control thumbwheel (with graduations from 0 to 14 and a cut-out midposition) is used to adjust the IF amplifier gain which determines the size and definition of the displayed radar returns.

PULSE WIDTH SELECTOR SWITCH

The two position LONG/SHORT toggle switch selects the pulse width in relation to PRF.
Although only two positions are selectable, there are actually three pulse widths available: SHORT, MEDIUM and LONG.
SHORT pulse selection allows the best resolution with minimum energy available for single target detection.
LONG pulse selection is recommended in normal mapping mode in conjunction with LIN gain and low PRF (in 40, 80 NM scale).
MEDIUM pulse (SHORT position selected) provides a small reduction in return intensity (in 40, 80 NM scale).
MEDIUM pulse (LONG position selected) is the only pulse with sufficient energy for a target/fixpoint approach (in 20 NM scale).

Post mod. 10912: The PRF schedule is controlled by the GMR, i.e., the GMR automatically operates the radar with the appropriate PRF/pulse width selection upon manual selection of PR F/pulse width in accordance with the following table:

NOTE

With the CRPMD in the STB mode, 20 NM scale selected and distance to the target approx. 18 NM, an adverse display effect is shown on upper part of the screen. This is caused by the internal BITE operation while the receiver is disabled between pulses. To prevent this effect the scale has to be reduced.

RECEIVER GAIN CONTROL SWITCH

The two position LIN/LOG toggle switch is used to alter the GMR Automatic Gain Control (AGC) function. With LOG selected (useful for distance below 10 NM), radar returns are amplified logarithmically to highlight strong signals and prevent clutter. With LIN selected (useful above 10 NM), the AGC is linear and radar returns are displayed at an amplitude proportional to their signal strength. With SHORT (high PRF) pulse selected (final setting for target approach), LIN gain automatically is selected, regardless of switch position.

THRESHOLD CONTROL

The THRESHOLD control thumbwheel (with a graduation from 0 to 14 and a cut-out midposition) is used to determine the threshold (minimum level of signal strength) to be displayed on the CRPMD. Radar returns above and below the set threshold are adjusted by the IF GAIN control.

MONOPULSE RESOLUTION IMPROVEMENT PUSHBUTTON/INDICATOR

The MRI pushbutton/indicator illuminates white when pressed and initiates monopulse resolution improvement of image definition in azimuth. The improvement is obtained by reducing azimuth beam errors at close range after the

target has been ranged. It is deselected by a second press. This function is available in PENCIL beam only and if HT FIND is not selected.

GMR CONTROLS & INDICATORS

A CRPMD

1 Range Cursor read-out
2 Track angle read-out
3 Tilt angle read-out
4 Across track cursor read-out
5 GMR fail light-fail/override pushbutton indicator
6 CRPMD fail- indicators
7 Test switch
8 Fade control knob
9 Scan to scan contrast inversion switch
10 Freeze/Fade/Intermittent hold selector switch
11 Display viewing port
12 Range rings display selector switch
13 Scale selector knob
14 North up mode pushbutton
15 Look ahead mode pushbutton
16 Normal mode pushbutton
17 Stabilized mode pushbutton
18 Home on jam mode pushbutton
19 Terrain aviodance mode pushbutton
20 Beacon mode pushbutton
21 B scan mode pushbutton
22 Air to ground ranging mode pushbutton
23 Intermittent mode pushbutton
24 Lock-on mode pushbutton
25 Display mode selector
26 Cursor switch
27 Contrast/brightness control knob
28 Map illumination switch
29 Map/Marker indicator brightness control knob

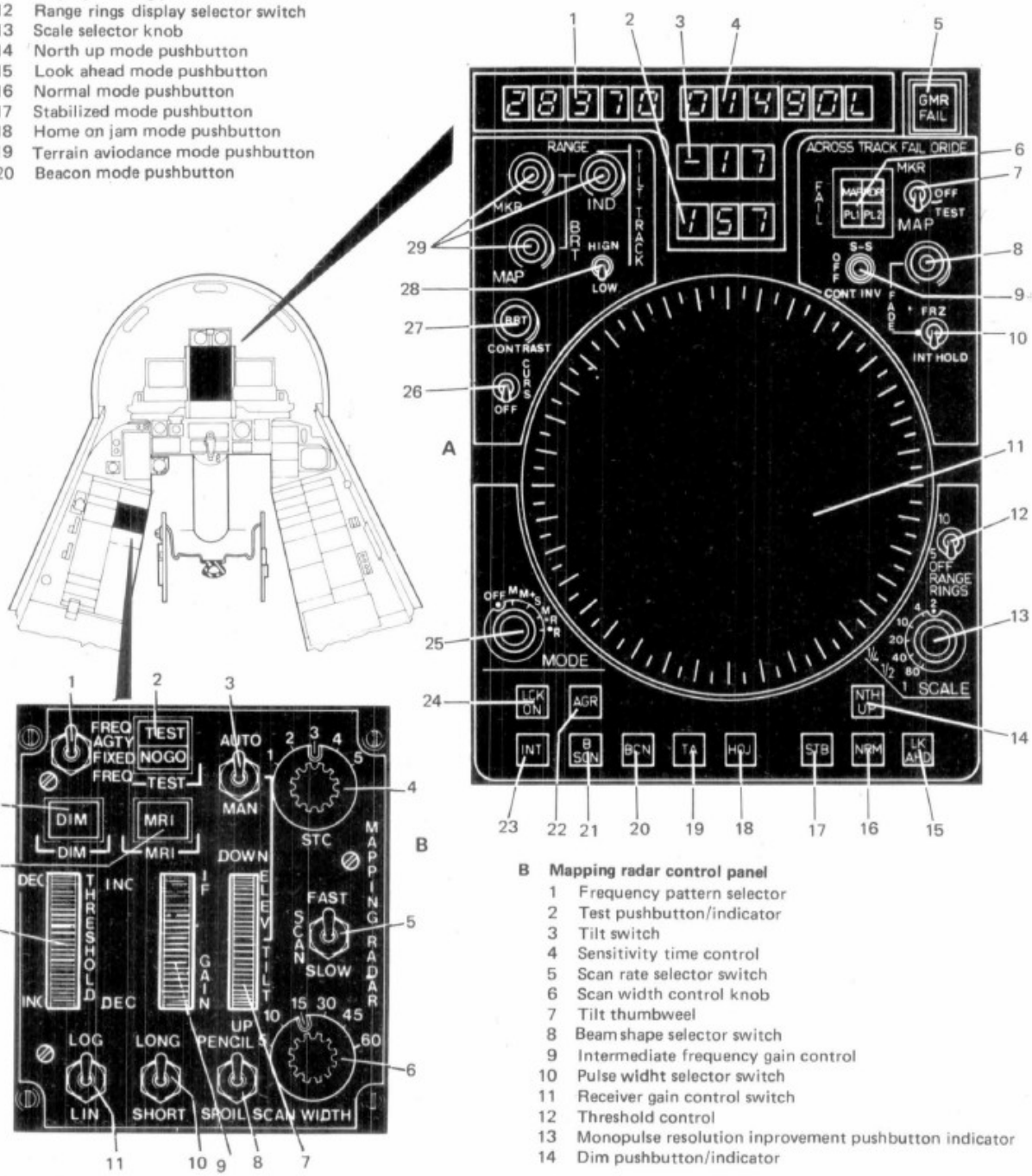

B Mapping radar control panel

1 Frequency pattern selector
2 Test pushbutton/indicator
3 Tilt switch
4 Sensitivity time control
5 Scan rate selector switch
6 Scan width control knob
7 Tilt thumbweel
8 Beam shape selector switch
9 Intermediate frequency gain control
10 Pulse widht selector switch
11 Receiver gain control switch
12 Threshold control
13 Monopulse resolution inprovement pushbutton indicator
14 Dim pushbutton/indicator

DIM PUSHBUTTON/INDICATOR

Pressing the DIM pushbutton/indicator, the caption DIM illuminates to indicate that transmitter output power is reduced, enabling a "quieter" approach to a target. Also, clutters are reduced when approaching a target at ranges between 6-8 NM (MEDIUM pulse). The function is available in GM, BCN and HOJ modes.
A second press deselects the DIM function and reverts to normal power output.

NOTE

The two pushbutton/indicators DIM and MRI are mechanically locked when pressed even if facilities are not available.

Combined Radar and Projected Map Display (CRPMD)

NOTE for Microsoft Flight Simulator:

All CRPMD controls are clickable but functionality is limited – some of the indicators and functions in MSFS differ from the real world. In general it is safe to assume that all the controls and displays which are connected to the weapon system OR not essential to normal navigation are INOP.

The following controls and indicators (see figure) are provided:

RANGE CURSOR DISPLAY

The five-digit RANGE numeric read-out indicates, the plan range, up to 99,999 feet, between the aircraft present position (PP) and the range cursor position (slant range in reversionary).

NOTE for Microsoft Flight Simulator:

In MSFS this display shows the distance between the PP and the current waypoint / destination (in feet)

TILT ANGLE DISPLAY

The three-digit TILT numeric read-out indicates the radar antenna depression angle in degrees, together with + or - indicating upward or downward. In Auto mode it is the angle relative to radar intersected ground, in TA mode it is the angle relative to the horizontal plane.

NOTE for Microsoft Flight Simulator:

In MSFS this display shows the aircraft pitch attitude.

ACROSS TRACK DISPLAY

The six-digit ACROSS TRACK read-out indicates cursor position across track in feet, together with a L or R indicating left or right of track.

TRACK ANGLE DISPLAY

The three-digit TRACK angle read-out indicates actual track in degrees.

GMR FAIL INDICATOR/OVERRIDE PUSH BUTTON

A FAIL ORIDE button, with an integral amber GMR FAIL light, illuminates in the event of a GMR equipment overheat/pressurization fail. If conditions dictate, the FAIL ORIDE pushbutton may be pressed within 20 seconds after illumination of GMR FAIL, to extend GMR operation for a maximum period of 2 minutes with the risk of equipment damage and degraded performance. After that time GMR shuts down automatically.

TEST SWITCH

The three position TEST toggle switch provides the following functions:

MKR A film marker test frame is displayed in conjunction with the map test pattern.

MAP A map test pattern is displayed which allows the symbols to be aligned via NH C and compared with the film test frame. Map alignment is completed by pressing the Insert button on the NHC.

OFF Test frame pattern facilities are disconnected. The display is returned to the pre-mode operation.

NOTE for Microsoft Flight Simulator:

The CRPMD Test switch is INOP in MSFS.

CRPMD FAIL INDICATORS

The 4 FAIL indicators have the following functions:

MAP The fail indicator is illuminated red to indicate a map drive fault.

RDR The display failure indicator is illuminated red to indicate a radar display fault.

PL1 The projection lamp indicator is illuminated green to indicate serviceability of the first spare projection lamp when pressed or MAP or TEST has been selected.

PL2 The projection lamp indicator is illuminated green to indicate serviceability of the second spare projection lamp when pressed or MAP or TEST has been selected.

SCAN TO SCAN/CONTRAST INVERSION SWITCH

The three-position toggle switch provides the following functions:

S-S Radar returns from scintillating targets are integrated to provide a stable display.

OFF All facilities are deselected.

CONT INV This position provides contrast inversion of the radar display.

FADE CONTROL KNOB

The rotary potentiometer controls the function of the fade. Turning clockwise the fade rate increases to maximum. The FADE control is overridden when freeze or intermittent hold is selected.

FREEZE/FADE/INTERMITTENT HOLD SELECTOR SWITCH

A 3-position FRZ/DATE/INT HOLD switch alters the video persistence to maintain, clear or renew the display. The selected symbols operate normally with any position selected.

FRZ When selected in any mode/facility except North-up or test, radar video is no longer updated, and the last azimuth scan is displayed until the FRZ position is deselected.

FADE When selected, the radar video is displayed and updated for as long as the NHC intermittent radar trigger is pressed. When the trigger is released, the radar video decays at a rate determined by the FADE control.

INT HOLD When selected INT, radar video is displayed and updated for as long as the NHC intermittent radar trigger is pressed. When the trigger is released, the last azimuth scan is displayed until the trigger is pressed again or the INT HOLD position is deselected.

NOTE

With INT pressed and illuminated, the GMR transmits only when the NHC intermittent trigger is pressed. Radar video is displayed as determined by the FRZ/FADE/INT HOLD switch, but the projected map and symbols remain as previously selected.

RANGE RINGS DISPLAY SELECTOR SWITCH

The three position OFF/5/10 toggle switch enables the display selection of range rings at 5 or 10 NM intervals in any radar mode display except North-Up.

SCALE SELECTOR KNOB

The six-position rotary SCALE knob selects the transmitter PRF and the scale at which the projected map and radar video are displayed:

NOTE

Scale selection of 10, 4 or 2 inhibits the map display. Map is only available in 4 (1:50 K) NM scale when STB is selected for slide use.

Post Mod. 01625 the 10 NM map scale is available.

CRPMD MODE PUSHBUTTON/INDICATORS

Four combined pushbutton/indicators are used to select modes controlling the display position of the aircraft PP and track. They illuminate when selected and are deselected by a second press or by selection of another mode. The display presentation changes as follows:

NTH UP Radar video is suppressed, and the projected map is displayed with the aircraft present position marker at the centre of the screen and the north at the top. Aircraft track is indicated by a line with origin at the centre of the screen (PP marker) and extending to the compass rose.

STB The radar video and the projected map are ground stabilized to display a previously selected destination, identified by the computer marker, at the centre of the screen. If FIA is not selected at the TV/TAB, the display is stabilized on the position currently at the screen centre (PP if STB is selected from NTH UP). The track is aligned parallel to the vertical bisector of the screen. If no map is available at the selected scale, the film is driven to the "off map" position. If no destination has previously been entered into the MC, the map is immobilized, and radar video is suppressed at the moment of STB selection.

NRM The aircraft PP and the radar scan origin are at the bottom of the screen. The track is represented by a line along the vertical bisector of the display. When only the map is displayed, aircraft PP is represented by a small arc. This is the basic mode and is displayed when selected either pressing the NRM button or cancelling any of the other three modes. The map is suppressed if B-SCAN mode or 2, 4 and 10 scale has been selected.

LK AHD The scan origin is moved approximately one screen diameter back, to have a loof the terrain ahead. The mode is inhibited if 80, 40 or 2 scale is selected. Any GMR facilities can be selected nut the map is suppressed when BSCN is selected.

GMR FACILITY PUSHBUTTON/INDICATORS

Seven facility pushbutton/indicators, each controlling a radar mode or facility, provide the following functions:

HOJ The pushbutton/indicator illuminates white when selected or when entered automatically. Selection causes GMR to home-on to a source of radar jamming.

TA The pushbutton/indicator illuminates white when selected. The facility provides obstacle warning above the horizontal plane of the aircraft (Terrain Avoidance).

BCN The pushbutton/indicator illuminates white when selected. The radar interrogates remote surface beacons which transpond coded replies.

B SCN The pushbutton/indicator illuminates white when selected and changes the display from PP sector scan to B scan.

AGR The pushbutton/indicator illuminates white when selected and causes the radar to enter the Air-to-Ground Ranging mode.

INT The pushbutton/indicator illuminates white when selected. Radar transmits only when pressing and holding the intermittent radar trigger on the NHC.

LCK ON The pushbutton/indicator illuminates white when selected, to enter the Lock-On mode and acquire. Any previous radar video mapping is held for 5 sec and then faded. After successful lock-on a synthetic video is presented and the GMR provides outputs of range/range rate, angle/angle rate, and track bits to MC.

Successful selection is dependent on compatibility with modes or facilities already selected.
Mode/Facility compatibility is shown in figure.

DISPLAY MODE SELECTOR

The five-position rotary MODE selector controls the power supply and selects CRPMD modes as follows:

OFF Power supplies to GMR and CRPMD are disconnected. Antenna stowed and locked.

M Power is supplied to the CRPMD, and projected map and symbols are displayed. RPMD is operable. Electrical and hydraulic power to the GMR still disconnected.

The OFF and M positions are detented to prevent inadvertent operation.
Press and turn to select these positions.

M + S Projected map and symbols displayed as selected. Radar now on Standby and provided with electrical and hydraulic power. Internal continuous BITE starts to run.
Post mod. 10912: AAT, AGR, and TEST modes can be entered.

M + R Projected map and symbols displayed and the GMR is fully operative.

R GMR is fully operative, but projected map inhibited. RPMD remains operable.

NOTE

A pause of a least 2 sec shall be made in the OFF position when recycling the GMR.

CURSORS SWITCH

A two position CURS/OFF switch selects range and across track cursors to be displayed. The cursors are controlled by the NHC if the CURS/MARKER switch is in the down position.

RADAR CONTRAST/BRIGHTNESS CONTROL KNOB

The rotary CONTRAST/BRT switch adjusts the contrast and brightness of the radar image.

MAP ILLUMINATION SWITCH

The two position HIGH/LOW toggle switch introduces a filter into the optical path when in the LOW position to improve the map colour balance by reducing brightness of the map display.

MAP BRIGHTNESS CONTROL KNOB

The rotary MAP BRT switch adjusts the brightness of the projected map display.

MARKER BRIGHTNESS CONTROL KNOB

The rotary MKR BRT switch adjusts the brightness of all symbols displayed.

INDICATORS BRIGHTNESS CONTROL KNOB

The rotary IND BRT switch adjusts the illumination intensity of the digital indicator displays.

Navigator's Hand Controller (NHC)

The NHC (see figure), located on the central pedestal of the rear cockpit, provides some GMR/CRPMD controls (refer to NAVIGATION AND MISSION DATA for detailed information).

Navigator's Weapon Aiming Mode Selector Panel

Two buttons on the NWAMS panel (see figure) are associated with the GMR (refer to NAVIGATION AND MISSION DATA for detailed information).

Navigation Mode Control Panel

A button on the NMCP is associated with the CRPMD (refer to NAVIGATION AND MISSION DATA for detailed information).

Central Warning Panel

An amber CRPMD caption in the rear cockpit CWP illuminates to indicate an overheat condition, in conjunction with MAP or RDR fail lamps indicating overheating source.

Repeater Projected Map Display {RPMD)

The following controls and indicators are provided:

MODE/TEST INDICATOR
The indicator houses a group of four captions labelled STB, NTH, PLI and PL2:

STB Illuminated white when STB mode has been selected on the CRPMD.

NTH Illuminated white when NTH UP mode has been selected on the CRPMD.

PLI PL2 Illuminated to indicate that Projection Lamps are serviceable when PL TEST is selected.

FAIL INDICATOR The amber FAIL caption illuminates when a failure occurs in the map drive servo mechanism or the RPMD BITE detects a fault .

RPMD SCREEN
A compass rose, marked at five degrees intervals, surrounds the display screen. A circle, a square and a gapped line arc engraved on the screen to provide aircraft present position and track indications, as selected by the display mode selector.

SCALE SELECTOR
A three position scale selector controls the scale of the projected map when the PP , PP or SL mode have been selected.

BRIGHTNESS CONTROL
A rotary ORT control adjusts the display brightness.

MODE SELECTOR
A six position rotary switch controls the RPMD display mode, providing the CRPMD is operating:

OFF RPMD power is disconnected.

T A test pattern is displayed, to be aligned with the engraved symbols (not implemented)

R The map is a repeat of the CRPMD projected map with a reduced coverage area.
The scale selector is inhibited and the map has the same CRPMD scale.

PP Aircraft present position is indicated by the engraved circle at the centre of the screen. Aircraft track is indicated by the engraved gapped line.

SL The map can be slewed by means of the PIIC to display areas outside the normal viewing area (not implemented in MSFS).

PP Aircraft present position is indicated by the engraved circle at the centre of the screen. Aircraft track is indicated by the engraved gapped line.

NOTE for Microsoft Flight Simulator:

RPMD functionality is limited in MSFS, and in particular slewing is not implemented.

LAMP TEST SWITCH
The two position PL TEST toggle switch is spring loaded downward. When held in up position the two spare projector lamps are checked and, if the lamps are serviceable, the PL 1/2 test lamps are illuminated.

Pilot's Hand Controller (PHC)
The PHC, is located on the left console in the front cockpit. The ball control on the PHC provides RPMD map slewing. When the data insert switch is pressed, the map position coordinates are entered into the MC.

RPMD

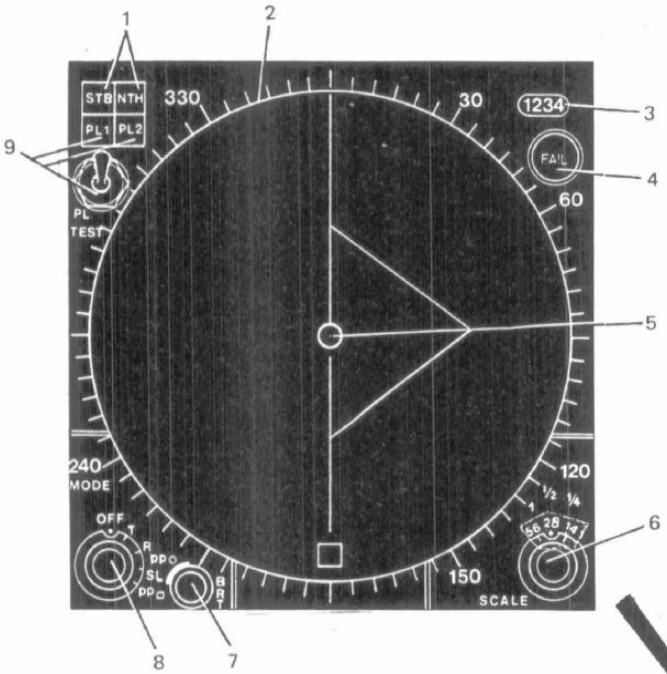

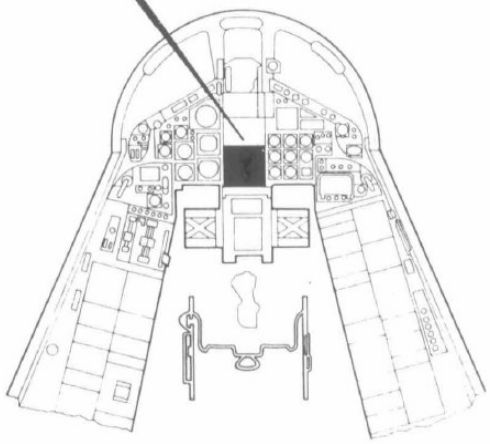

REPEATER PROJECTED MAP DISPLAY

1 Mode/test indicators
2 Compass rose
3 Elapsed time indicator
4 Fail indicator
5 Engraved symbols
6 Scale selector
7 Brightness control knob
8 Mode selector
9 Lamp test switch

TERRAIN FOLLOWING RADAR (TFR)

NOTE for Microsoft Flight Simulator:

In MSFS the Terrain Followng Radar functionality is limited, as the implementation is based on data gathered through the radio-altimeter. By examining the data coming from that system, the code will try and guess what is likely to be the profile of the terrain ahead. This works for many terrain types and regions, but will fail in case of abrupt altitude changes. In general, it is safe to operate only if the maximum increase in altititude of potential obstacles is greater than the ride height. Apart from that, displays, controls and system operations are substantailly indentical to the real world.

Biggest difference with real-world are as follows:

- TFR does not actually read the terrain in front of the aircraft, but tries to "guess" the profile looking at the previous altitude profile and its trend

- Automatic disconnection happens at a much lower altitudes.

The TFR provides the aircraft with a low-level all-weather flight capability by feeding Terrain Following (TF) commands to the autopilot and/or flight director system (see figure). It scans the terrain ahead and along the aircraft's track and measures range to the terrain as a function of elevation scan angle and the produced monopulse resolution improvement (MRI) pulse. The radar altimeter measures the height above the terrain. All this data are fed to the processor/computer, which processes these inputs together with primary and secondary sources of aircraft flight data from IN, MC, SAHR (see table below) and pilot selected data (ride control, set clearance height) to generate g-command outputs.

TFR Data Sourcers

Parameters	Primary Source	Secondary Source
Attitude	IN	SAHR
Drift	IN	MC
Incidence	IN	MC
Groundspeed	IN	MC
Turnrate	MC	IN

The g-command outputs are fed to the AFDS to produce pitch demands for flight director and commands for autopilot computation. These signals shall ensure that the aircraft maintains a set clearance height above the ground. A figure shows the terrain following control loop in simple terms. An E-Scope display in the front cockpit is used to monitor the TFR performance. Flight director indications are presented on the Head-Up Display (HUD) and the Attitude Director Indicator (ADI) (see figures).
Controls, on the AFDS control panel, permit the selection of clearance height and selection of hard, medium, or soft ride. The RIDE control changes the desired maximum pull-up (positive g) and push-over (negative g) command outputs and moves the zero command line up (for hard ride) or down (for soft ride) to shift the point of pull-up warning.
The operation of the TFR is continuously monitored by BITE. The primary and secondary flight data inputs are cross monitored and checked for validity. The status of the interface equipment is continuously monitored and combined with that of the TFR to provide a single TFR failure warning. The equipment provides an interruptive BITE which isolates and monitors any fault in a single LRU. A detected failure is indicated by illumination of the NO GO caption on the TFR control panel.

Power Supplies

The system is supplied with 115 V/400 Hz 3-phase AC from the AC busbar 1 (XP1) and 28 V DC from the DC busbar 1 (PP1).
The TFR equipment comprises the transmitter unit and the antenna/receiver unit; the radar mount/roll unit, the

processor/computer, and the power supply unit are common to the Ground Mapping Radar (GMR). All units are located in the aircraft nose cone.

Transmitter

The primary function of the transmitter is to generate high power Radio Frequency (RF) pulses. It also provides the generation of TFR timing pulses and a frequency analogue signal for use by the receiver automatic frequency control.

Antenna/Receiver

The antenna/receiver routes the transmitter RF output to the antenna and processes all received signal to produce the video output pulses required for TF computation. It contains the antenna control system which provides azimuth and elevation gimbal drive to produce the antenna scan pattern. During turning flight, the scan pattern changes to 3-bar indication giving an azimuth coverage for a larger scan in 1 second.
The antenna/receiver is monitored by BITE.

Processor/Computer

The common TFR/GMR processor/computer unit provides TF command outputs to the AFDS for terrain clearances and provides control of all BITE functions. Data are also routed to the ESRRD which serves as a representation of the TF performance to the pilot. The processor/program memory issues the software for controlling the nose radar as a GMR or TFR, or as a combined system.

Radar Mount/Roll Unit

The radar mount/roll unit provides the mounting interface between the radar system and the aircraft. The actual roll stabilization is performed in the GMR.

Power Supply Unit

The power supply unit, which is common to both TFR and GMR, generates low-voltage DC power from aircraft prime power and provides the power mode control interface for the radar. Additionally, 115 V, 400 Hz 3-phase AC is supplied from AC busbar 2 (XP2) for the E-Scope display.

TF Radar Control Panel

The TF radar control panel (see figure) is located in the front cockpit and carries the following controls:

MASTER SWITCH

With the three-position Master toggle switch TF. modes can be selected as follows:

OFF All power supplies to the equipment are disconnected.

STBY In this position power is supplied to warm up the system (3 min), dependent on the setting of the ground standby override switch.

ON TFR is fully operative and ESRRD displays signal return. AFDS can be engaged in the TF mode, if TF READY light on AFDS control panel is illuminated.

TEST PUSHBUTTON/INDICATOR

The TEST pushbutton, with integral split legend caption TEST/NO GO, shall be pressed to initiate INTERRUPTIVE BITE. If the TEST caption, which will illuminate white during test, is not lit, press TEST button again. A second press, after test cycle is terminated, deselects TEST. NO GO caption is illuminated when a fault is detected during test or in flight when a TFR fault appears.

FREQUENCY PATTERN SWITCH

The two position FREQ AGTY-FIXED FREQ toggle switch controls the pattern of transmitter/receiver frequencies. Selection of FREQ AGTY provides a changing pattern of frequencies and the FIXED FREQ position selects random transmitter frequency fixed within in this pattern.

HEIGHT FAIL INDICATOR

The HT FAIL lamp is illuminated amber to indicate either IN is not in NAV mode or IN has failed.

TURN FAIL INDICATOR

The TURN FAIL lamp is illuminated amber when drift or turn rate monitor detects a discrepancy be-tween primary and secondary data.

E-Scope/Radar Repeater Display (ESRRD)

The ESRRD (see figure) is located on the front cockpit main instrumental panel and presents TFR video and -template information in the E-Scope (ES) and in addition a CRAM. line in the CRAM (CR) mode.
Also, GMR information, including a Test format, can be displayed in the Repeater (RPTR) mode as a repeat of the CRPMD in the rear cockpit.
The following controls and indicators are provided:

MODE SELECTOR KNOB

The five-position rotary MODE knob provides the following controls:

OFF All power supplies to the equipment are switched off.

TEST A display performance test pattern is selected (see figure).

RPTR Ground mapping video is displayed.

ES Terrain following display (E-Scope mode) is selected. ZCL and terrain video are displayed.

CR CRAM line is selected. CRAM line, ZCL, test pulse and terrain video are displayed.

PERSISTENCE CONTROL KNOB

The direct video storage tube persistence is controlled by the rotary PERSIST knob.

TFR MODE SELECTOR KNOB

With the three-position rotary TFR knob, following positions can be selected (TFR and ESRRD on):
- NORM — TF operation with normal TF, receiver sensitivity.

- Weather mode A (reduced TFR receiver sensitivity) to decrease the rain effect (false pull-up command) on the TF performance.

- Weather, mode B (limited TFR range and antenna scan angle) to restrict the processing region for TF command generation (**not cleared**).

BRIGHTNESS CONTROL KNOB

The rotary BRT knob is used to adjust brightness of the display. Clockwise rotation increases the brightness.

VIDEO GAIN CONTROL KNOB

The video level is varied by the rotary VIDEO GAIN knob. Contrast of the video will be reduced by turning the switch counterclockwise. Fully counterclockwise position gives zero video.

ESRRD OPERATION

With the ESRRD MODE set to TEST, the test format can be checked after a warm-up time of approx. 90 seconds. Then ES or CR can be selected as required.
In addition to the ESRRD test format, the ESRRD repeats the CRPMD MKR TEST display when the MODE selector is set to RPTR, and the TF TEST format when ES/CR is selected.
Video gain and brightness functions should be checked.

TF/AFDS Control Panel

The AFDS control panel (see figure) carries following TFR controls:

HEIGHT CLEARANCE SELECTOR KNOB

The rotary, nine position height clearance, knob selects the intended clearance height, measured in feet vertically above ground level.

TF PUSHBUTTON/INDICATOR

The TF pushbutton/indicator illuminates white when pressed to indicate the TF mode pre-selection has been made. The mode is cancelled by pressing, the pushbutton again and the caption then extinguishes.

TFR CONTROLS & INDICATORS

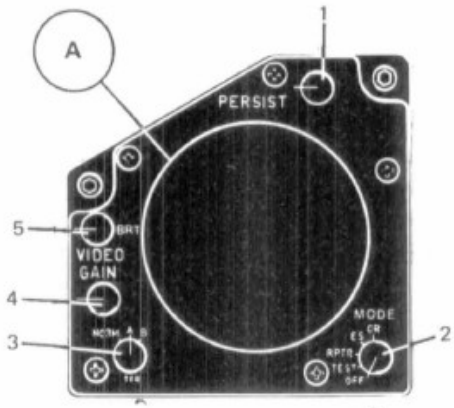

A ESRRD
- 1 Persistence control knob
- 2 Mode selector knob
- 3 TFR mode selector knob
- 4 Video gain control knob
- 5 Brightness control knob

B B Risk light

C Maneouvre monitor indicator

D TFR control panel
- 1 Frequency pattern switch
- 2 Test pushbutton/indicator
- 3 Master switch
- 4 Height Fail indicator
- 5 Turn Fail indicator

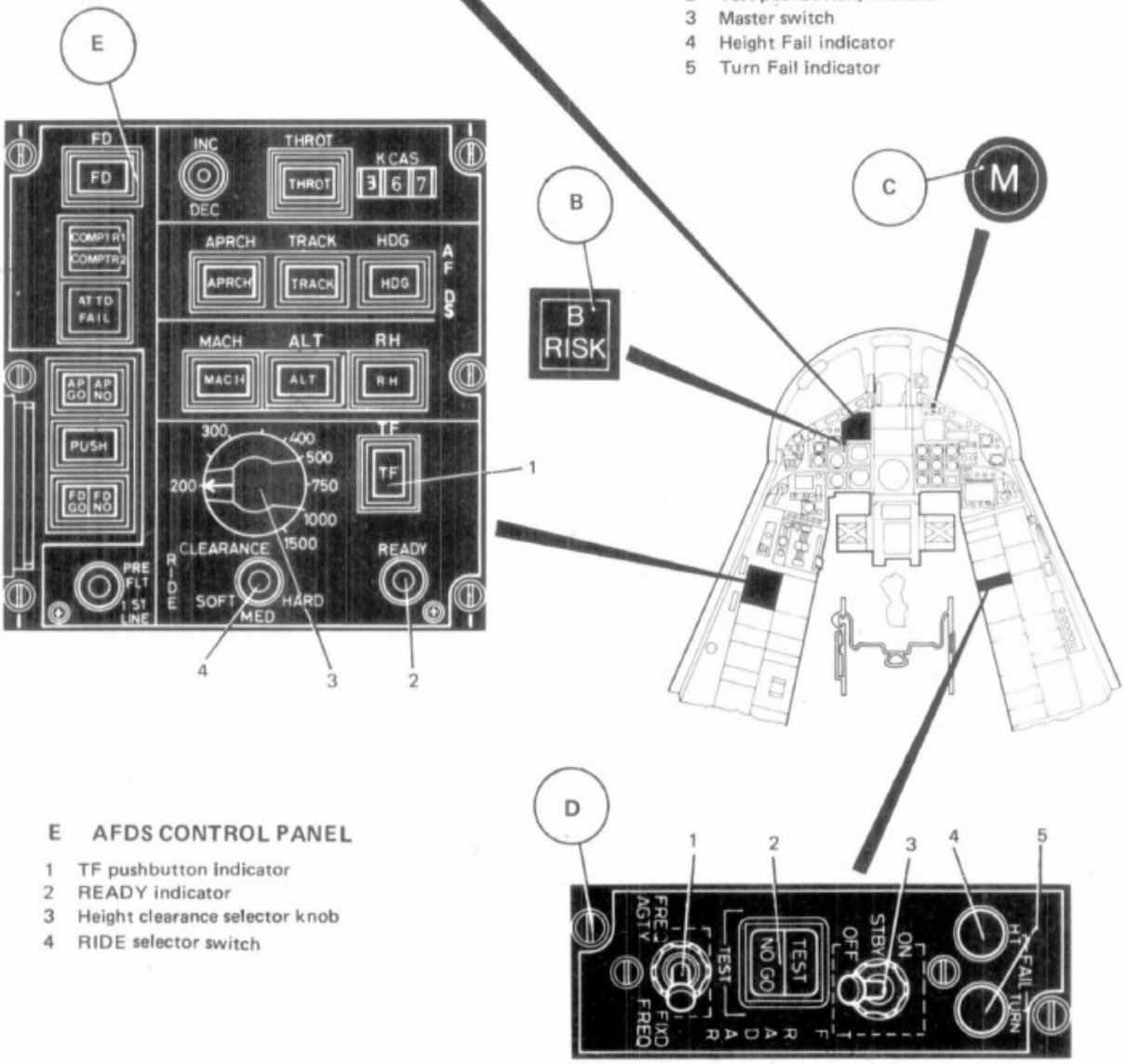

E AFDS CONTROL PANEL
- 1 TF pushbutton indicator
- 2 READY indicator
- 3 Height clearance selector knob
- 4 RIDE selector switch

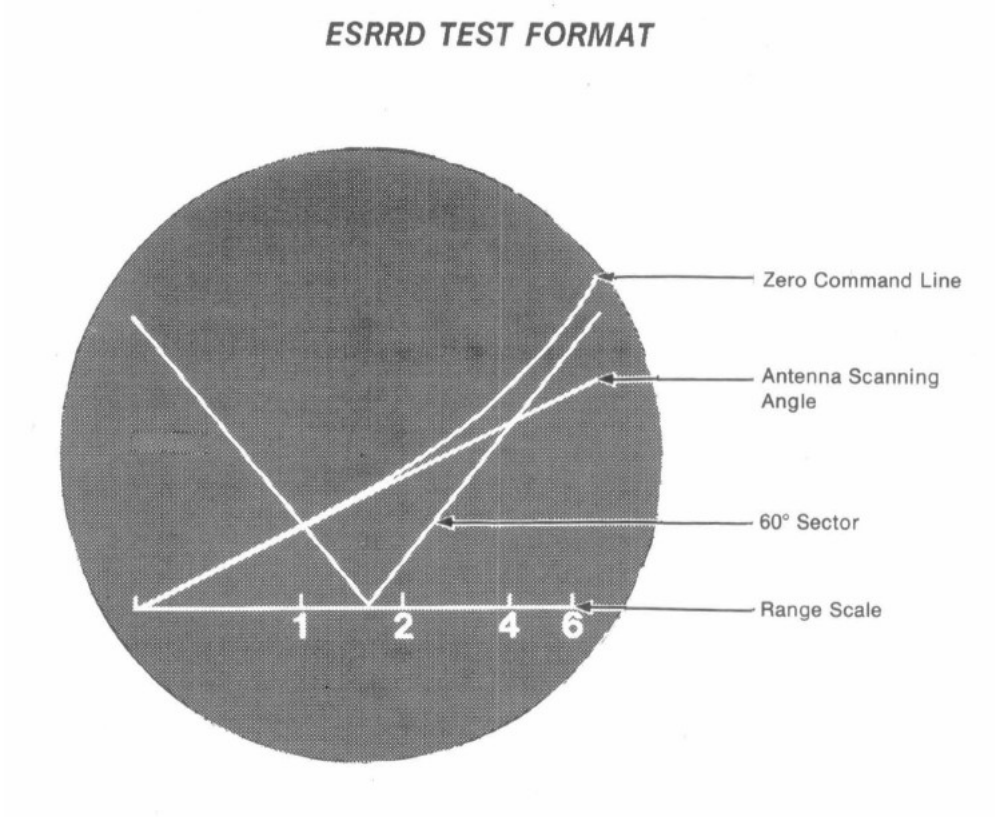

READY INDICATOR

The READY indicator lamp illuminates green when the TFR is warmed up, the TFR switch, on the TFR control panel, has been selected to ON, and the TF data good signal is passed to the AFDS, indicating the readiness for TF engagement.

RIDE SELECTOR SWITCH

The three-position RIDE toggle switch with selections of SOFT, MED and HARD is used to select the required ride during TF by varying the pull-up/push-over command g-limits. Selection of HARD RIDE corresponds to the best terrain following performance.

Central Warning Panel

TFR CAPTION

The red TFR captions, located on the front and rear CWP, will illuminate under the following conditions:

- Loss of input power/power failure.

- Loss of bank stabilization from GMR.

- Bank angle exceeds + 55°.

- Failure of IN input, together with input from either MC (Doppler) or SAHR.-A discrepancy outside outer limits between the primary and secondary inclination and elevation incidence signals or a discrepancy outside the limits between the primary and secondary bank and ground speed signals.

- failure detected by internal TFR BITE also produces a NO GO indication on the TRF control panel.

The amber TF MON caption, located on the front CWP, will illuminate under the following conditions:

- Primary or secondary data input failure.
- Discrepancy between primary and secondary data in drift and/or turn rate.

MANOEUVRE MONITOR INDICATORS

The amber M lamp (see figure) on the anti-glare shield in combination with a special 600 Hz audio illuminates by either excessive turnrate, unobeyed command, or Low height Warning (LHW).

B RISK LIGHT

The amber B RISK light on the front cockpit (see figure) instrument panel below the E-Scope is illuminated whenever the selected CLEARANCE height is less than 350 feet and/or the aircraft speed exceeds 0.9 M with MODE-B selected on the E-Scope.

TFR Command Parameters

ZERO COMMAND LINE

The Zero Command Line (ZCL) is the path of TFR range scan angle combination which produce 0 g TF commands. The shape and position of the line vary dynamically in space as a function of several parameters, i.e., speed, selected clearance height, selected ride condition and aircraft flight vector. But, regardless of its position, obstacles penetrating the line generate a pull-up command and obstacles below the line, but not touching it, generate a push-over command. The line has the shape of a "ski toe". In line with the "g" command generation the ZCL is also flight vector stabilized
A, the figure shows the ZCL for a horizontal flight condition as generated for M 0.9, 200 ft set clearance height, hard ride, flight case. The vertical and horizontal scaling is equal, so that the shape of the lines is shown exactly as it would appear, if it could be seen, in space ahead of the aircraft.
B, C, D, figures show the variation of the ZCL, relative to the position shown in figure A, as a function of velocity, set clearance height, ride setting and flight vector. At high velocity the aircraft approaches an obstacle more rapidly and the radius of the pull-up maneuver is larger than at low velocity; therefore, the ZCL moves outward and downwards to provide an earlier pull-up command as velocity increase, see figure B.
At higher set clearance heights, the ZCL is shifted downward to keep the aircraft farther from the terrain (figure C). Since it is not necessary to maneuver as rapidly to safely avoid the terrain at high set clearance, the ski toe is also rated downward to provide a smoother flight.
As the RIDE control is changed to give a softer ride, the pull-up command shall come earlier since the radius of the push-over maneuver is larger. Thus the "ski toe" is moved outward for softer rides as shown in figure D.
In Weather mode B the processed commands take account of the reduced scan angles and range limits. The flat portion of the ZCL, is elongated and the curved portion flattened with softer ride setting.
As the aircraft flight vector changes, the ZCL is also rotated. In order to provide adequate warning when in a dive condition, the ZCL is rotated downward while for a climb it is moved upward (see figure A).
The range and scan angle data defining the ZCL is sent to the E-scope where the ski toe shaped line is displayed.

CRAM LINE

A "fall-back" safety feature for the TF. loop in the form of a terrain proximity warning function, called the Clearance Range Ahead Monitor (CRAM), is provided.
The CRAM equations define a template (CRAM line) which is located ahead of the aircraft and lies between the aircraft position and the space location of the TF zero command template.

WARNING
TERRAIN SHALL NEVER PENETRATE THE CRAM LINE. IF THIS OCCURS, MANUAL OVERRIDE ACTION SHALL BE TAKEN. (A FULL FLIGHT DI¬ECTOR PULL-UP COMMAND OR AN AUTOMATIC PULL-UP WILL BE GENERATED BY THE SYSTEM IN ADDITION TO ADVANCED INFORMATION BEING PRESENTED ON THE DISPLAY)

NOTE for Microsoft Flight Simulator:

In this MSFS implementation, the TFR is simulated by trying to predict the terrain “trend” on the basis of the previous radio-altimeter readings. Therefore, the terrain profile shown in the ESRRD does not actually reflect the terrain ahead of the aircraft. Also, the ZCL is an approximation and changes only with the ride height selection. The CRAM line is also an approximation.

Note also that the TF disconnection limits are much lower than the real aircraft.

SCHEMATIC

ZERO COMMAND LINE

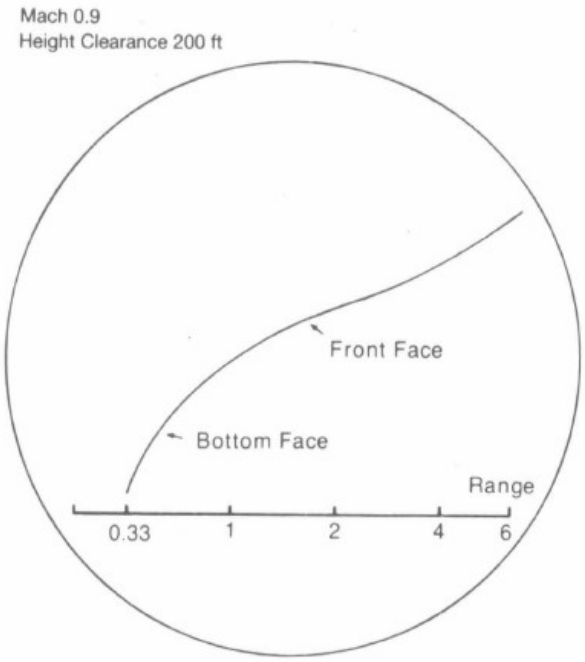

Figure A

VARIATION OF ZERO COMMAND LINE WITH SET CLEARANCE HEIGHT

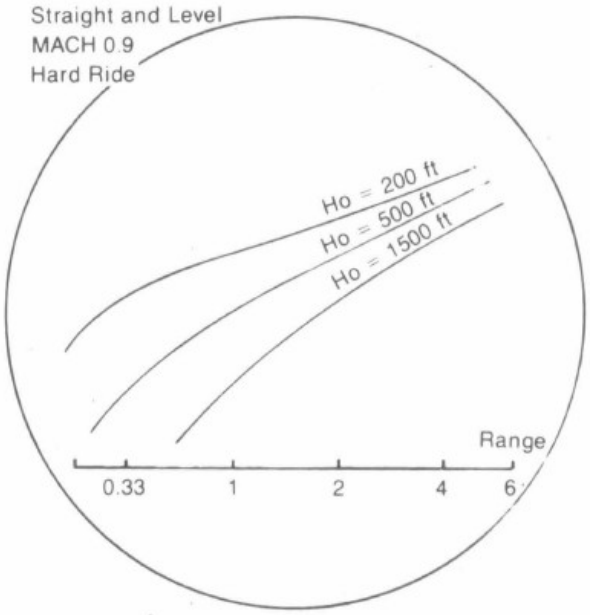

Figure C

VARIATION OF ZERO COMMAND LINE WITH VELOCITY

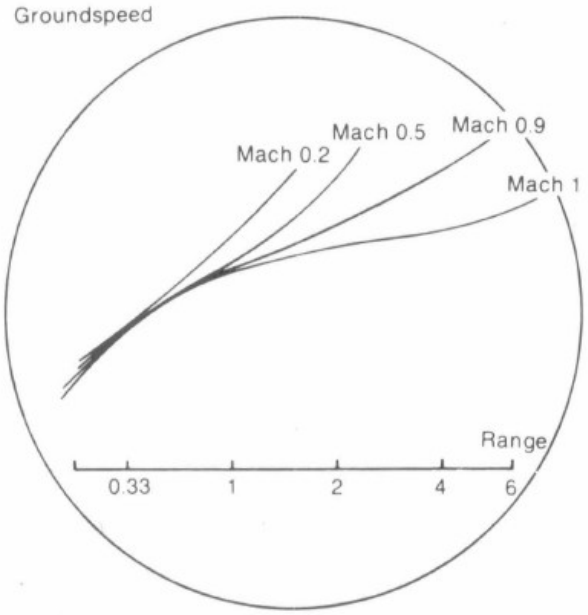

Figure B

VARIATION OF ZERO COMMAND LINE WITH RIDE SETTINGS

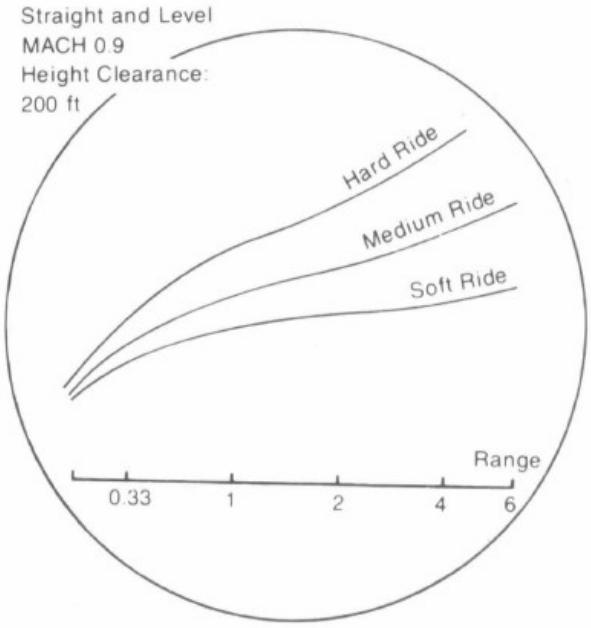

Figure D

SCHEMATIC

VARIATION OF ZERO COMMAND LINE WITH FLIGHT VECTOR

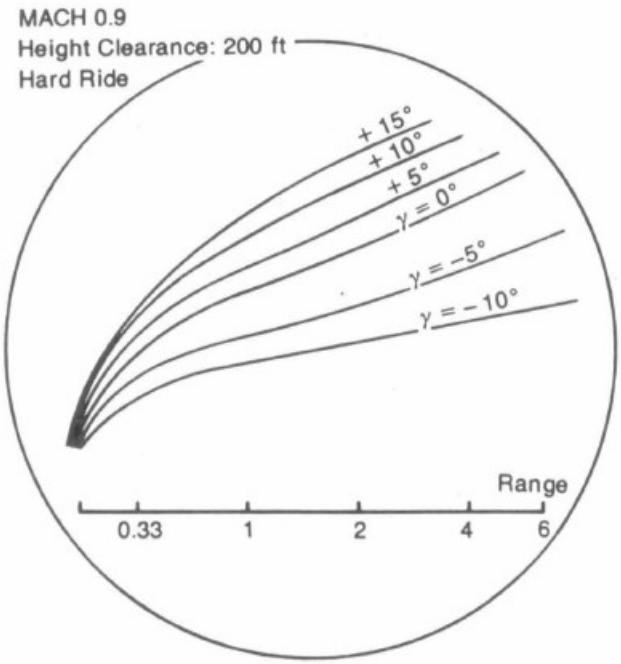

Figure A

CRAM/SPEED

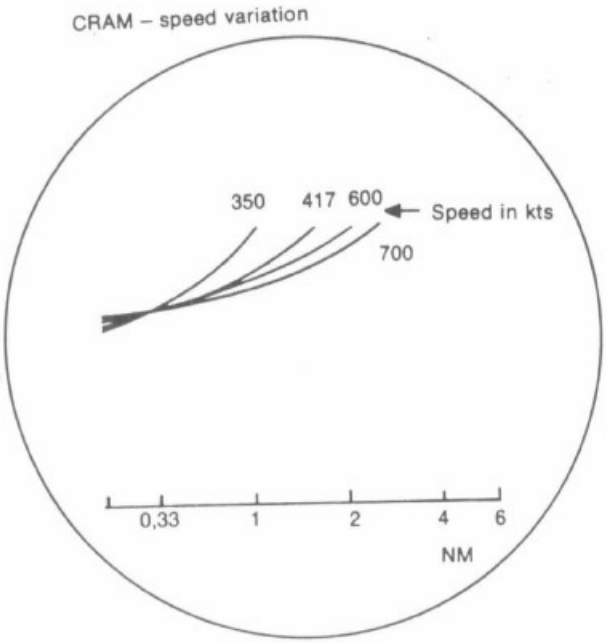

Figure B

CRAM/CLEARANCE HEIGHT

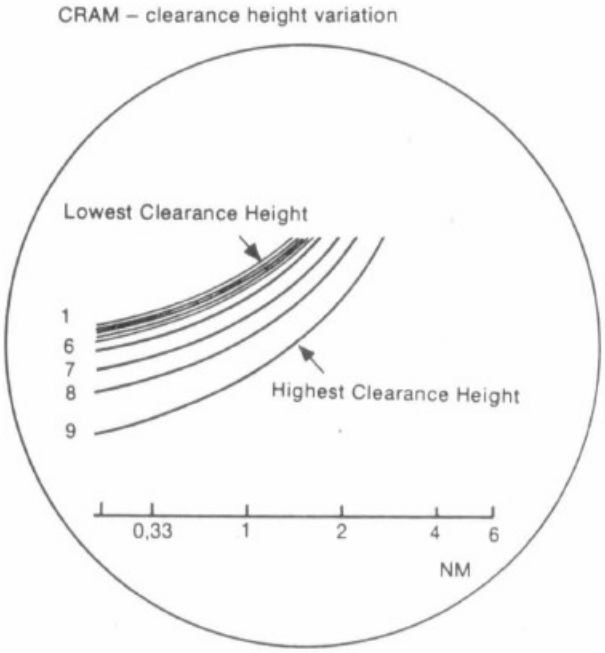

Figure C

FLIGHT VECTOR COMMAND FROM TER

In each alternate pulse, transmitted by the TFR, a desired flight vector is determined, based on radar range/scan angle information, selected clearance height, and attitude/velocity data from the IN, SAHR and MC. As the radar scan progresses, the most positive desired flight vector in one scan sequence is retained for use in generating the TE command.

The figure illustrates the regions of flight vector commands for a typical elevation scan. For the segment of terrain shown, push-over commands (negative flight vector) are generated from radar returns in regions A and C. A zero command is generated in region B and at the intersection of C and D.

Pull-up commands (positive flight vector) are generated in region D with the largest pull-up command occurring at the top of region D. Thus, the returns in region D would be retained for generating the TF command.

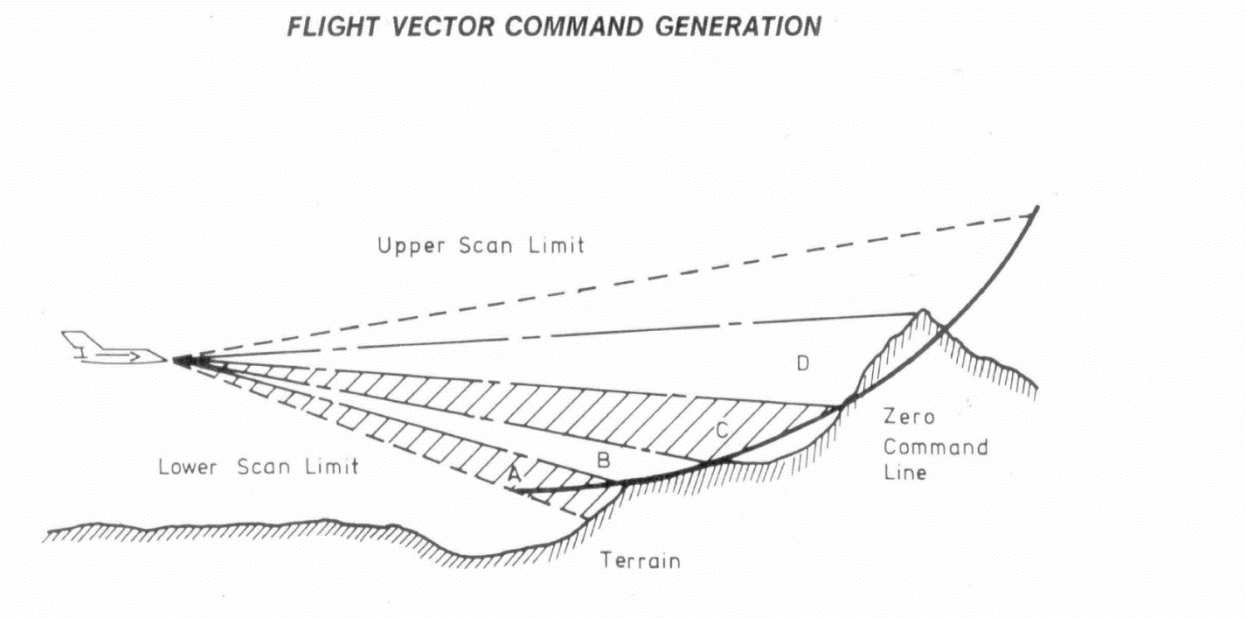

ALTIMETER OVERRIDE COMMAND

The radar altimeter generates the TF command when flying over water. In conditions where the terrain has very low radar reflectivity, an altimeter output is provided for adequate back up commands. Radar altimeter (override) commands tend to increase the average height at which the aircraft over-flies the terrain and are inhibited automatically whenever TFR returns are adequate.

MOST POSITIVE COMMAND

With the altimeter override command functioning, the TFR most positive logic chooses the greater between the TFR command and the altimeter override command. Thus, the aircraft is always commanded with the largest climb angle demand.

DRIFT, GROUNDSPEED, ELEVATION INCIDENCE AND TURN RATEDATA

A drift signal is required in the TFR for offsetting the radar scanner when flying in crosswind. Turn rate is required for offsetting the scanner in turning flight. Groundspeed and elevation incidence signals are used to determine TF commands in the processor.

Primary and Secondary Data Monitoring

Primary and secondary input data of turnrate, drift, elevation incidence and inclination and bank are compared within the processor/computer. If a comparison threshold between primary and secondary inputs of either turn rate or drift is exceeded without a relevant detected failure, the TF MON caption on the front CWP and TURN FAIL on the TFR control panel will illuminate. This indicates the TFR is using fixed values for one or both input lines.

The comparison threshold for elevation incidence and inclination cross monitoring has an upper and lower limit. If the lower, but no the upper, limit is exceeded and no failure in the corresponding sensor has been detected, the TFR uses that input data which produces the most nose-up TF command. If the upper limit for elevation and inclination, and/or bank and G/S cross-monitoring is exceeded, the TFR captions on both CWPs are illuminated and TF-data good signal to the ANDS is removed.

TFR MODES AND OPERATION

TER ground operation is prohibited. The TFR control panel MASTER switch should be set to STBY with FIXED FREQ selected allowing the equipment to warm up (approx. 3 min). Additionally the TFR MODE selector on the ESRRD can be set to NORM.
Five TFR functional states affect the TFR operation:

NOTE

The Ground Standby Override switch 5 ST is an external control switch near the CMP which is operated by the groundcrew and selects one of the two Standby modes when the aircraft is on ground.

Ground Standby The ground standby mode (aircraft on ground and ground standby override switch in ON, STBY selected on the TF control panel) provides equipment warm-up with minimum power consumption. The transmitter is inhibited from operating and the antenna is held in a stow position by electro-magnetic brakes. Selecting TER to OFF disconnects all power supplies immediately.

Standby In the standby mode (aircraft airborne or ground standby override switch in OFF, on TF control panel STBY selected) all power supplies are provided, and the antenna (also the GMR antenna) is driven into aircraft boresight position.The common processor/computer provides the TFR antenna/receiver unit with roll stabilization. After 3 minutes in the standby mode, full equipment operation (TEST or ON) is enabled within 2 seconds of se-lection. Selecting TFR to OFF allows the processor/computer to drive the TFR and GRM antennas to their stow position.

TEST The test mode provides equipment operation with the transmitter power dissipating into the dummy load. The antenna scans its normal pattern, and a complete check of the equipment operation is carried out by a BITE. The interruptive TEST mode can be selected from either the ground standby or the standby mode, but not from the TF mode.

TF In the TF mode the equipment processes all its input signals together with video returns and antenna elevation scan position information for generating TF commands.

Weather Modes A and B The weather modes A and B selected at the ESRRD enable terrain following in precipitation without a significant increase in false pull-up commands.

NOTE

If recycling from ON or STBY mode a pause of a least 2 sec shall be made in the OFF position.

TFR TEST

The TEST mode can be selected from Standby and Ground Standby only after warm-up. With the TEST button on the TFR control panel pressed, the interruptive BITE program is initiated, and a complete test of the equipment is carried out. The TEST-in-progress lamp should illuminate for 10 sec from Standby or 12 sec test period from Ground Standby. If the TEST lamp does not light up, wait 2 sec then press again to reset the system. The TEST mode may be cancelled thereafter, as long as the TEST lamp or the NO GO lamp is on, by pressing the TEST button twice (cancel and reset). When the mode is entered from Ground Standby, the TER, TF MON, and R ALT captions on the CWP, the M (Man Mon) light on the anti-glare shield, the NO GO, TURN, and HT FAIL indicator lamps on the TF RADAR control panel, and the B RISK light on the front center panel illuminate for a 5 sec period.

NOTE

- If IN is not aligned (e.g., when STATUS 4 not indicated), TFR/CWP warning will illuminate till the end of TEST cycle. TFR/CWP together with a NO GO signifies a genuine TFR failure.

- To repeat the TEST on ground, a pause of 10 sec shall be made (after the white TEST caption on the TFR CP is extinguished), before initiating a new interruptive BITE.

NOTE for Microsoft Flight Simulator:

Test mode is not completely implemented in MSFS.

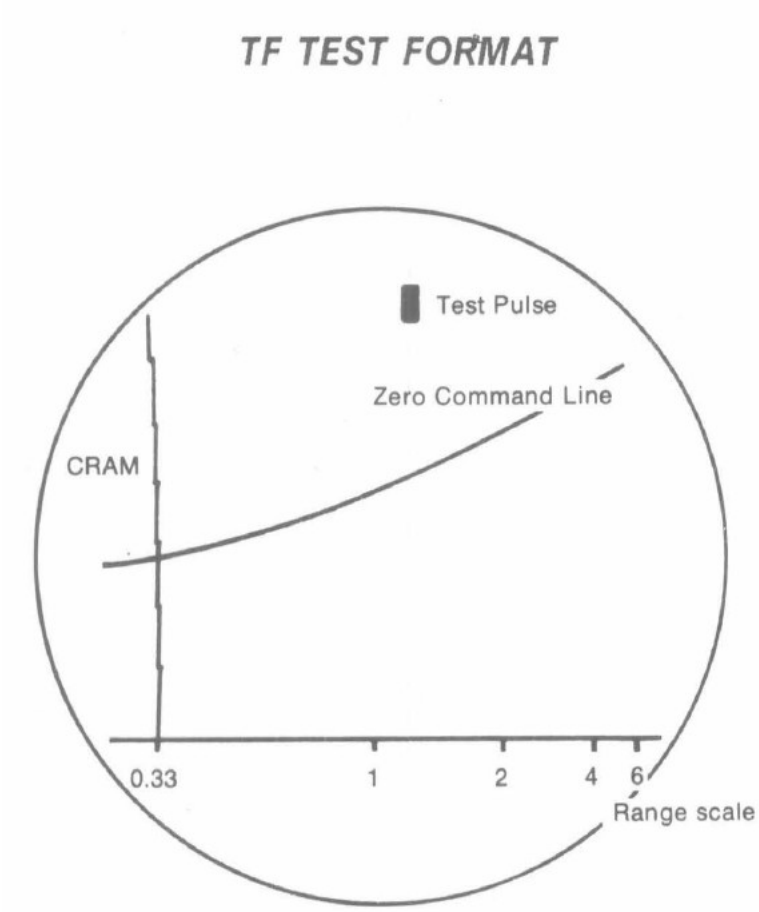

This pattern is shown when CR is selected.

When the mode is entered from Standby, these indicators except those on the CWP, will illuminate but for 3 sec only.
At the completion of the interruptive TEST period the TEST lamp will extinguish, the TFR will revert.to Ground Standby or Standby, as selected, unless a failure was detected and indicated by the NO GO lamp.
If a failure has been detected the TFR will enter a 30 sec failure reporting period, where the appropriate lamp, indicators, and captions will be illuminated (in Ground Standby only).
This reporting period may be cancelled by pressing the TEST button twice with a 2 sec interval.

CAUTION
FAILURE TO OBEY THIS MANDATORY SEQUENCEY MAY CAUSE DAMAGE TO THE GMR ANTENNA OR LRU 1.

The interface to the ESRRD can be checked if the ESRRD MODE selector is set to ES/CR. The TF Test pattern will appear on the ESRRD. The Test format is generated for a zero ft/sec ground speed and 350 ft altitude. If CR is selected, the zero com-mand line, test pulse, CRAM line, and range scale are displayed (see figure).
If ES is selected, only the zero-command line is displayed. Video gain, brightness control and persistence functions should be checked.

DESCENDING INTO TERRAIN FOLLOWING

During the descent into TF, the aircraft's TF performance shall be checked at various heights.
Height, airspeed/wingsweep should be within limits. On the AFDS panel selection of ALT or MACH should be made with AP engaged. To check the Stick-Force-Cut-Out (SFCO), the control stick is to be pulled back. AP light will extinguish and AFDS modes be disengaged. AUTO P caption on the CWP should not illuminate. After checks completed re-engaged AP if required. RADIO shall be selected on the HUD to give an indication of radar height.

When RAD ALT lock-on has been confirmed, the radar height read out on the HUD should be com-pared with that on the RAD ALT (TACAN should be in OFF/REC and CCS in UPPER).
With FIXED FREQ selected on the TFR control panel, the MASTER switch shall be set to ON and NORM is selected on the ESRRD. A check on ZCL, CRAM, ground returns and test pulse can then be performed.
With the TF READY light illuminated, intended SCH, Ride and other modes selected, pressing the TF pushbutton on the AFDS control panel engages the AFDS in its TF mode. Before TF engagement, to ensure that flight director information is displayed correctly on both HUD and ADI, FD shall be selected. The displayed Ton the HUD may be taken as a genuine system check.

During TF let down, the pilot should compare the E-Scope indications with those on the HUD and confirm the proper behaviour of the aircraft. When confident of the aircraft's TF performance, descent may be made by setting the CLEARANCE control to the intended TF clearance height. The RAD ALT low height marker is set to 10% below the intended set clearance height to be flown and provides a warning of low height. Subsequent reductions in SCH and selection of RIDE condition and APDS modes can be made as required.
(To acquire and follow a pre-planned TF route, TRACK may be selected on the AFDS control panel. A constant airspeed is maintained if THROT is selected).

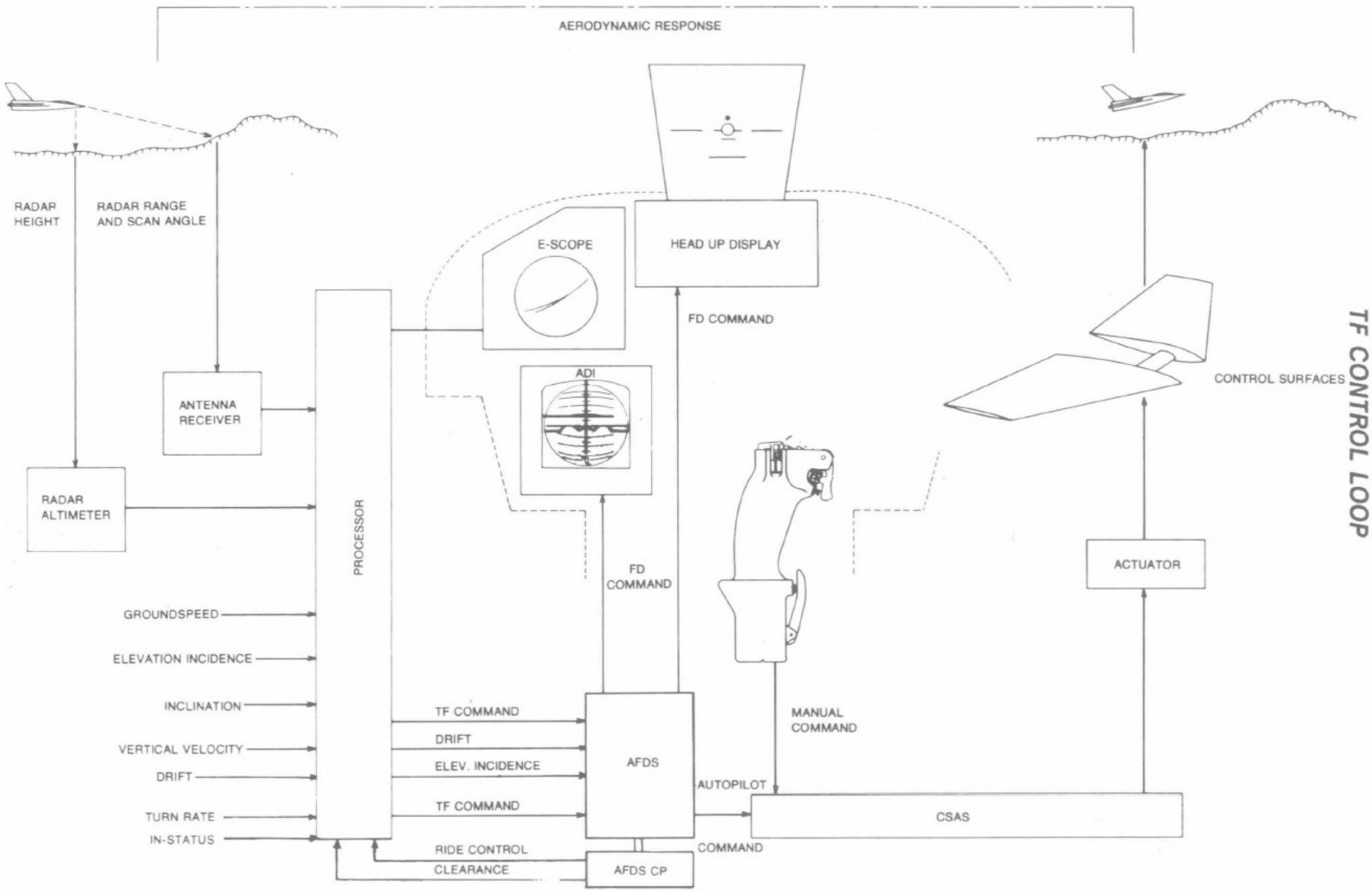

TF CONTROL LOOP

E-SCOPE, ADI AND FD INDICATIONS (TYPICAL)

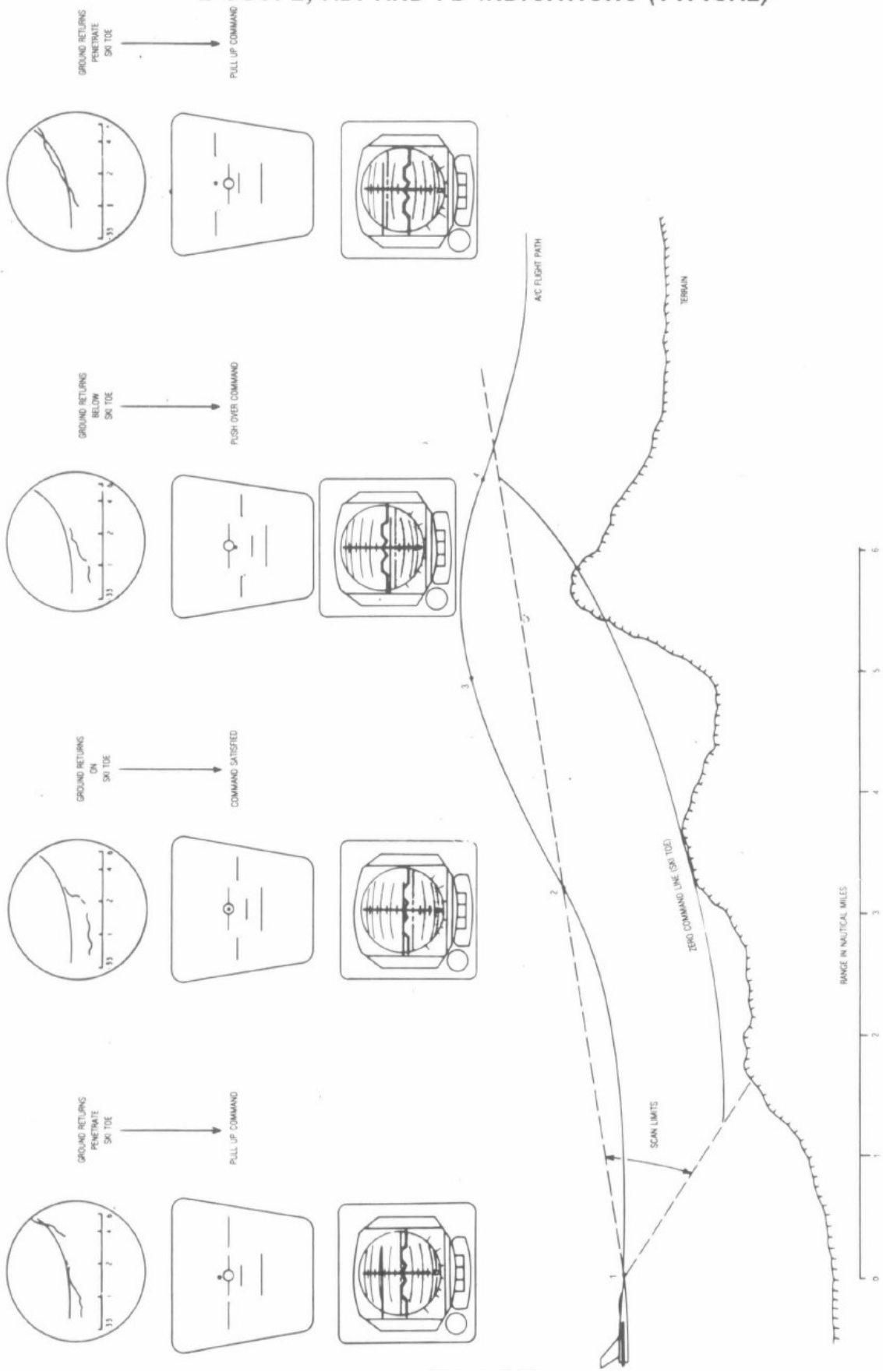

CAUTION

TF MALFUNCTIONS

TFR FAILURES

Each TF-fail condition removes TFR data good signal from the AFDS, and the AFDS generates a wings level and pull-up command indicated on the HUD. This command has to be followed by the pilot in manual flying, whereas if autopilot is engaged, the aircraft will automatically execute the wings level and pull-up manoeuvre.

CRAM FAILURE

If status checks or cross-monitoring of CRAM input data indicate unreliable inputs, or if internal monitoring of the integrity of CRAM indicates a failure, the CRAM is disabled (i.e., taken out of the TF-data good loop) and the CRAM line disappears from the E-Scope.

RADAR ALTIMETER FAILURE

If a fail condition is detected, indicated by the illumination of the amber R ALT caption, it will have an effect on TF flying as follows:
Providing the TFR is receiving good ground returns, the AFDS/TF mode remains engaged with a slight increase of clearance height. If the TFR is not receiving ground returns, i.e., when flying over water or over flat ground having a low radar reflectivity, a shallow climb command is initiated. Therefore, in either case TF has to be discontinued.

FAILURE OF PRIMARY SOURCE DATA INPUT

The IN is the primary source of attitude and velocity data for the TFR. A failure in this source of data is indicated by the illumination of the HT FAIL indicator on the TFR control panel. In addition, the amber TF MON on the front CWP, the amber IN caption on the rear CWP and the ATTD FAIL indicator on the AFDS panel will illuminate.
In these circumstances the TFR continues to operate, using the secondary source data (Doppler, SAHR, MC) without cross-monitoring.

FAILURE OF SECONDARY SOURCE DATA INPUT

The MC and SAHR provide the secondary source of attitude and velocity data which is used by the TFR to monitor the primary source. A failure in the secondary source is indicated by the illumination of the amber TF MON caption on the front CWP. Depending on the nature of the failure, amber CMPTR, SAHR or DPPLR captions on the rear CWP and the ATTD FAIL indicator on the AFDS CP panel may also illuminate. The TFR continues to operate using primary source data without cross monitoring.

FAILURE OF DRIFT AND TURNRATE DATA INPUT

If primary and secondary drift and turnrate from IN and MC exceed the cross-comparison threshold, TURN FAIL on the TFR control panel and TF MON caption on the CWP illuminate. A reversionary mode of operation is provided in which the two fail indications still illuminate.
The table FAILURES AFFECTING TERRAIN FOLLOWING summarizes the failure warnings and their causes.

DOPPLER NAVIGATION RADAR (DOPPLER)

The Doppler provides velocities to the MC in the along Vx, across Vy, and vertical axes Vz. These velocities are mixed with the IN velocities through the Kalman Filter, to provide best estimates of aircraft velocities for use in the navigation and weapon aiming calculations. Doppler velocities, together with SAHR inputs, are used in the MC to derive groundspeed, drift angle, and vertical velocity. These outputs monitor IN outputs during Terrain Following and constitute a reversionary mode (see figure). The equipment incorporates a continuous BITE facility which monitors signals and voltage supplies from reference sources. A detected failure is indicated by illumination of the amber DPPLR caption on the rear CWP.

NOTE for Microsoft Flight Simulator:

Doppler navigation radar is not simulated in this MSFS rendition, although its controls can be switched for procedural purposes.

Limitations

The equipment performs within a groundspeed range from 50 to 1800 kt and a drift angle of ± 30°. Maximum

altitude limitation is 70000 feet.
The Doppler consists of a transmitter/receiver antenna unit, and a doppler control panel. A doppler radome assembly which is flush mounted on the underside of the forward fuselage, protects the directional antennas.

Transmitter/Receiver Antenna Unit

The transmitter/receiver unit is located in the forward equipment bay. Via a 3-beam antenna array the signals are transmitted and are received by a directional antenna array.
The signals are processed to provide digital output of velocities to the MC.

Doppler Control Panel

The Doppler control panel (see figure) is located on the right console in the rear cockpit and has the following controls:

ON/OFF SWITCH

The two position ON/OFF toggle switch controls the power supply. In the OFF position the power supply is switched off and the amber caption DPPLR is illuminated on the rear CWP. With the switch set to the ON position, the Doppler will be operative within 1 min and the DPPLR caption extinguishes.

TEST PUSHBUTTON/INDICATOR

To initiate interruptive BITE, the TEST push button shall be pressed once. Pressing it a second time cancels interruptive BITE. The indicator illuminates white to indicate that TEST has been selected.

NOTE

When the aircraft is on ground, the doppler will automatically be switched into its TEST mode by a WOG signal, preventing spurious failure warnings. In this case, pressing the TEST button checks the illumination of the indicator only.

LAND/SEA SELECTOR SWITCH

The LAND position of the two-position toggle switch is adopted where good ground returns are expected with the Doppler operating in normal condition. Switching to SEA, when flying over water or bad reflective surface, changes the velocity output scaling.

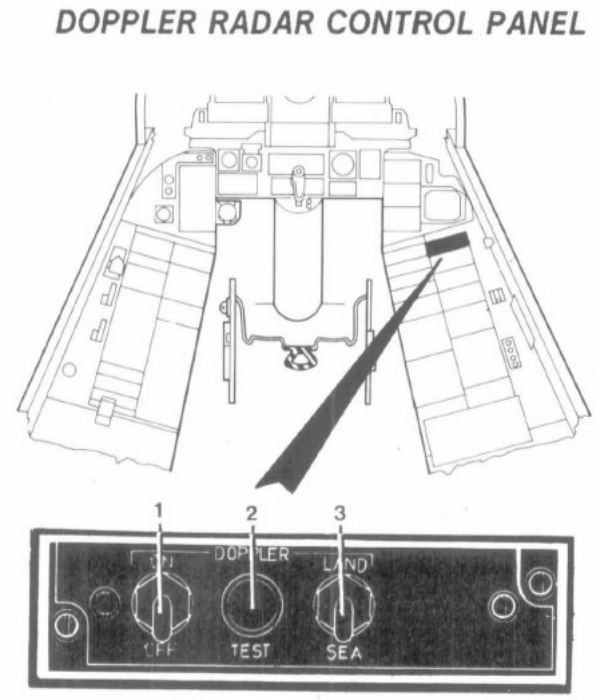

Doppler control panel
1 ON/OFF switch
2 Test pushbutton/indicator
3 Land/sea selector switch

Central Warning Panel

DOPPLER CAPTION

The amber DPPLR caption on the rear CWP illuminates to indicate either a failure in the Doppler navigation radar or when the equipment is switched off if TFR is on.

TF MON CAPTION

Loss of Doppler outputs, causing degradation of the MAIN mode and loss of Terrain Following monitoring, is indicated by the illumination of the amber TF MON caption on the CWP in the front cockpit.

DOPPLER OPERATION

The Doppler is activated by selecting the power ON position. With the TV/TAB display unit selected to the Navigation format, a contrast inverted UN-LOCK indication appears for 4 sec.
By pressing the TEST button, Doppler interruptive test is performed. The time required for the test does not exceed 2 minutes and after it has been completed, the equipment goes into the operating mode. Depending on the surfaces to

be overflown, the
LAND/SEA switch shall be set. During flight over good reflective surfaces, the switch should be left in the LAND position. Due to differences in Doppler performance over low reflective surfaces, it is re-commended that SEA is selected, as this will im-prove the effect of Doppler on MAIN mode performance.
Indications of actual groundspeed and drift angle are displayed on the TV/TAB by selecting NAV, or F/A and pressing the VEL key on the MFK.

Doppler Transient Monitor

The purpose of the Doppler transient monitor is to detect possible transients in the Doppler velocities (Vx, Vy, Vz), caused by the external environment, i.e., sudden changes in soil reflectivity caused by ground, calm water, and rough water in alternation.

RADAR ALTIMETER (RA)

The Radar Altimeter measures height above the surface by transmitting and receiving a radio pulse and is used as a height sensor. For the height performance in TF, RA functions as a monitor, whereas in RH mode, RA becomes the basic sensor. The equipment supplies information to the AFDS, the TFR, the HUD, the MC, and the Crash Recorder, as shown in figure.
The RA consists of a transmitter-receiver, two antennas and an indicator.

Limitations

The system provides height information up to 5000 feet within pitch and bank angles up to ± 60° over all types of terrain.
The indicator instrument has an accuracy of ± 3 ft or ± 3% of dm actual height whichever is greater for heights up to 5000 ft.

Transmitter-Receiver

The transmitter-receiver is located in the forward equipment bay. It contains a transmitter, a receiver and a range computer.
The transmitter produces pulses of high energy RF (4300 MHz) at a pulse frequency of 10 KHz. The pulses are routed to the transmitter antenna and at the same time a timer reference pulse is generated which initiates the range computer. When the return signal is received it is processed and sent to the range computer which measures the elapsed time from pulse transmission to pulse reception and converts this time to signals representing minimum height. Height is supplied in analogue and digital form to accommodate the requirements of the navigation system.
If a temporary loss of received signals occurs, the equipment reverts to a memory mode which holds the last value of height and inhibits any warning signals for a period not exceeding one second.
If the loss of signals exceeds one second, a status signal is cancelled, and the indicator shows the FAIL flag.

Radar Altimeter Indicator (RAD ALT)

The RAD ALT is located in the front cockpit (see figure) and provides the following controls and indications:

HEIGHT POINTER

The height pointer indicates height against a circular scale which is graduated between 0 and 5000 feet.

FAIL/FT x 100 INDICATOR.

The two position FAIL/FT x 100 indicator flag shows the following equipment status:

- FT x 100 Displayed when the equipment is switched on and operating normally.
- FAIL A black and red striped marker is displayed when the equipment is switched off or when there is a fault condition.

LOW HEIGHT WARNING INDICATORS

The red low height warning indicator, on the indicator, illuminates if the indicated height falls below the level set by the set height marker.
A red low height repeater warning lamp (figure A) is located on the left-hand side of the AOA indicator and repeats the warning indication accompanied by a 600 Hz audio warning tone.

SET HEIGHT MARKER CONTROL KNOB/SET HEIGHT MARKER

The rotary height marker knob, labelled with the symbol of the height marker, operates a low height marker against

the outer rim of the scale to manually set minimum height.

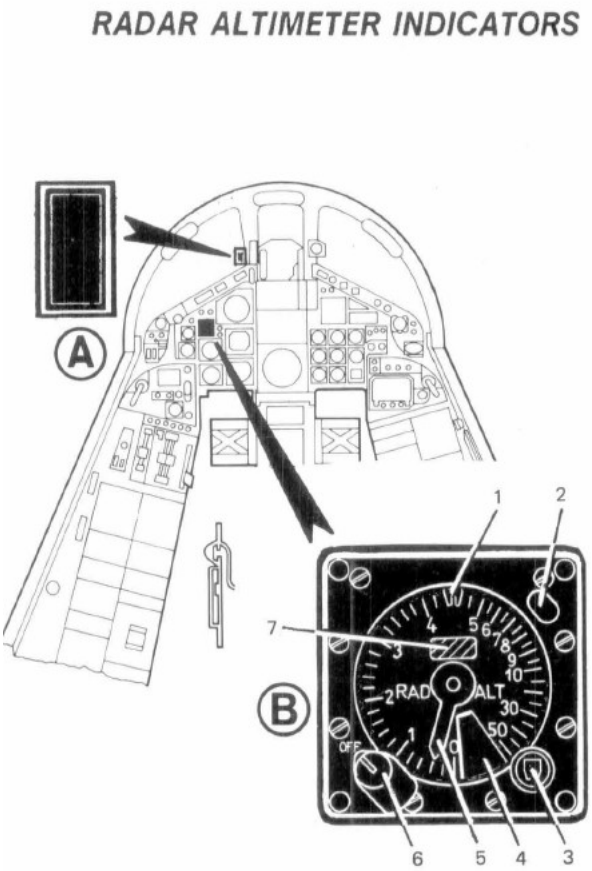

POINTER MASK

The height pointer will move behind a mask when the height exceeds 5000 ft, when there is a fault or when the equipment is switched off.

ON-OFF/PRESS-TO-TEST SWITCH

The combined two position rotary ON-OFF/PRESS TO TEST switch provides the following controls:

- ON/OFF All power supplies to the equipment are switched on or off.
- PRESS TEST Pressing and holding the switch initiates the BITE which checks the complete transmitter-receiver unit and indicator. The antennas and cables are not tested.

Central Warning Panel

R ALT CAPTION

The amber R ALT captions, on the front and rear CWPs, illuminate to indicate a failure in the RA equipment, or an unlock condition when TF mode on the AFDS has been engaged and the TFR gets no ground returns.

RA OPERATION

After ON has been selected and a warm-up period of approx. 1 min has elapsed, the height pointer will move from behind the mask position to indicate height above ground.
If there is a minimum height requirement, the height marker may be set to the desired minimum height level. Before using the low height warning facility, a confidence check may be carried out by setting the height marker to a height value above that at which the aircraft is flying, thus ensuring that the low height warning indicator, the head up repeater lamp and the warning tone are functioning.

Bite

The interruptive BITE is initiated by pressing and holding the PRESS TO TEST button. If the test is successful, the indicator displays a height of 100 ± 10 feet. cross-checking with the HUD and monitoring of the low height warning should be per-formed.

NOTE

This test is inhibited when operating in TF or RH modes.

RA Malfunctions

If the signal is lost for more than 0.4 sec the FAIL flag is shown on the RAD ALT.

RA Failure

If there is a power failure inside the RA equipment, the amber R ALT captions on the CWPs will illuminate. All radar height information will disappear and selection of an alternative height sensor (e.g., BARO) is required.
When flying in RH mode with AP engaged AUTO P will illuminate to indicate the failure. In this case, AP will be

disconnected after wings level and an OLPU command is established. RH is automatically disconnected.
If TF has been selected and no TER returns are received, a shallow climb command is generated. Discontinue TF flying (especially over sea).

PROCESSING

MAIN COMPUTER SYSTEM

The MC system, when loaded with the operational flight program, performs the major role in navigation and weapon aiming. This role ranges from logical decision making (for navigation moding) to complex trigonometrical calculation (for position fixing and weapon aiming).
A continuous BITE facility is provided for the MC.

Main Computer (MC)

The MC, using signals supplied by navigation and height sensors and other various equipment, continuously calculates parameters and produces navigational data, display inputs and weapon release signals.
The MC stores these data and controls signals in the memory. Access in made via an automatic selection of data made by the MC itself and via controls/displays in both cockpits. Data are then read from the memory and continuously processed by the computer and transduced to the appropriate displays.

NOTE for Microsoft Flight Simulator:

Main Computer, Interface Units and Waveform Generator must be switched on for the TV/Tabular display to operate in the backseat.Also,if the plane starts cold and dry, the flight plan must be loaded via the CVR RDE.

Interface Units (IFU 1 + IFU 2)

Equipment which receives and transmits data in digital• form is directly linked to the MC. Equipment which does not possess this facility is linked to the MC via IFU 1 and IFU 2. The IFUs provide digital/analogue and digital/discrete conversion facilities.
IFU 1, in general, serves the front cockpit and IFU 2 the rear.
IFU 1/2 malfunctions such as power supply failure, input voltage out of limits or temperature overheat are indicated by the IFU 1/IFU 2 caption on the CWP.

Main Computer Control Panel (MCCP)

The MCCP (see figure), located in the rear cockpit, provides power supply switching facilities for the MC, IFU 1 and 2, and WFG. It also pro-vides indications of program loading progress and faults by a LOAD-FAIL indicator.

MC POWER SWITCH

The two-position ON/OFF MC power toggle switch connects the MC power supplies. It is locked when in the ON position and shall be pulled before it can be set in the OFF position.

PROGRAM LOAD/FAIL INDICATOR

The LOAD/FAIL, indicator includes the upper white caption LOAD, which illuminates during program loading, and is extinguished when loading is successfully completed, and the lower amber caption FAIL, which is illuminated when the MC detects a program loading or in-flight failure.

WAVEFORM GENERATOR POWER SWITCH

The three position WFG toggle switch provides the following selections:

ON-OFF Controls WFG power supply.

MAIN COMPUTER CONTROL PANEL

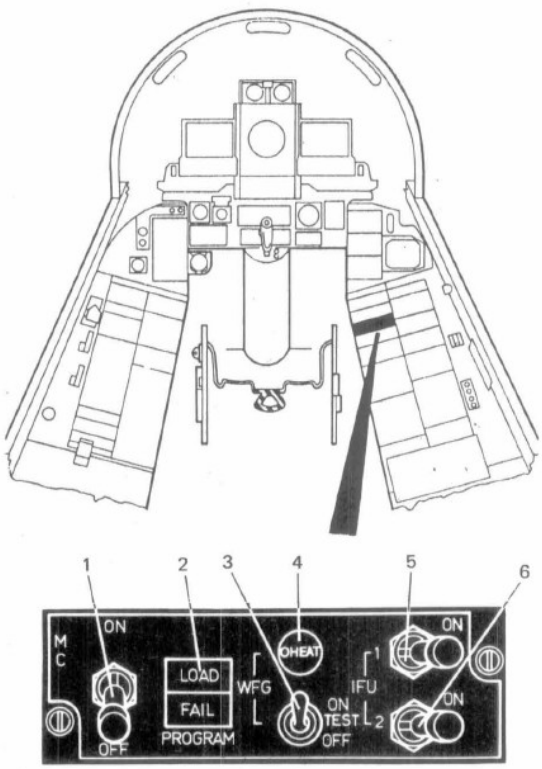

1 MC power switch
2 Program load/fail indicator
3 Waveform generator switch
4 Waveform generator overheat indicator
5 Interface unit 1 switch
6 Interface unit 2 switch

TEST WFG interruptive BITE test is initiated, and a Test format is displayed on the TV/TAB.

OVERHEAT INDICATOR

The OHEAT indicator illuminates amber when the WFG overheats, or a failure is detected in WFG BITE operation.

IFU 1/IFU 2 POWER SWITCH

The IFU 1 power switch controls the IFU 1 and HSI power supplies.
The IFU 2 power switch controls IFU 2 power supplies.

Central Warning Panel

CMPTR CAPTION

A failure within the MC system, resulting in computer shutdown, is indicated by the illumination of the amber CMPTR caption on the rear CWP.

IFU 1/IFU 2 CAPTION

IFU malfunction as power supply failure or temperature overheat is indicated by the illumination of the amber IFU 1/IFU 2 captions.

MC OPERATION

The MC, IFUs, WFG and TV/TABs shall be ON before a program, map film data and mission data can be loaded. Confirmation of correct system functioning is given on the CWP when the captions CMPTR, IFU 1 and IFU 2 are not illuminated.

MISSION DATA

Mission data consist of the steering route and the fixing route. The steering route is a sequence of destinations to be overflown and the fixing route is a sequence of planned fixpoints. The MC can store up to 80 destinations in two sets, designated primary and secondary mission data stores, but only one set of data at a time can be used by the MC 30 destinations by Rapid Data Entry (34 by manual insertion via MFK) are used for the Automatic Flight Plan (AFT). The remaining destinations are spares and can be called up for replanning a mission during flight or extending a mission beyond the MC flight plan capacity. The 30 destinations may comprise a combination of between 2 and 29 steering points and up to 12 fixpoints. Mission data provide the MC with the following navigation data which can be displayed by the TV/TAB when the appropriate selections are made on the MFK.

- Scaling and coordinate data associated with TV/TAB display Plan format.

- List of fixpoints, waypoints, targets and offsets, including all necessary lat/long and height AGL, range, and bearing, planned groundspeed, time over target, and CRPMD map-slide references.

NOTE for Microsoft Flight Simulator:

In this rendition, the Mission Data is equivalent to the Flight Plan. Flight plan must be prepared in the game map interface. If aircraft spawns in the game in a situation in which it is fully powered, and a flight plan is available, it will be automatically loaded, otherwise an RDE FAIL message is displayed in the TV/Tab.

If the aircraft spawns “cold and dark”, flight plan must be loaded during the “internal checks – rear cockpit” checklist, via the CVR Rapid Data Entry mode. Player must operate the CVR appropriately.

MISSION DATA PREPARATION

Mission data are prepared via the Cassette Preparation Ground Station (CPGS) stored by a CVR magnetic tape cassette or manually inserted via the TV/TAB keyboard.

NOTE for Microsoft Flight Simulator:

In this rendition, it is not possible to enter of edit the Mission Data from the TV/TAB keyboard – only pre-defined flight plans can be used.

MISSION DATA LOADING

Mission data are loaded into the MC before flight by the navigator. This could be done via the RDE facility from a CVR tape cassette previously prepared or manually via the TV/TAB keyboard.

Rapid Data Entry (RDE).

Mission data are normally loaded from a pre-recorded magnetic tape contained in a cassette (see figure). Before fitting the cassette into the CVR the navigator confirms that the CVR is not engaged but MC and both TV/TABs are on.
With a cassette carrying pre-recorded mission (and map) data, the following operation should be per-formed:

- The master switch is set to OFF, and mode se-lector to REPLAY. Now insert the cassette, and switch to STBY. Set the tape position 3-digital readout to 000 and start by setting the mode selector to DATA ENTRY and the master switch to START position. When the cassette starts to run, the computer carries out a parity and syntax check. The first word is a control word and is automatically checked by the MC. A correct control word causes the RDE, mode to be entered, both TV/TABs to be cleared and LOAD on the MCCP to be displayed. A fault detected in the control word is indicated on the MCCP by illumination of the FAIL lamp.

- If the FAIL lamp illuminates during loading, the tape should be run in reverse until the tape position indicator stops counting and the FAIL lamp is extinguished.

- If the FAIL lamp illuminates again when the tape drive is resumed, the recorder should be switched to STIBY and the cassette removed and re-inserted or changed. Recycle the MC if required.

- After approx. 10 sec, if data entry has worked properly, the word RDE COMPLETE is displayed on the TV/TAB (for RDE format, see under TV/TAB description). Then tape position counter indication can be noted as the beginning of the inflight recording and the tape should not be reversed beyond this point unless a repeat RDE is required.

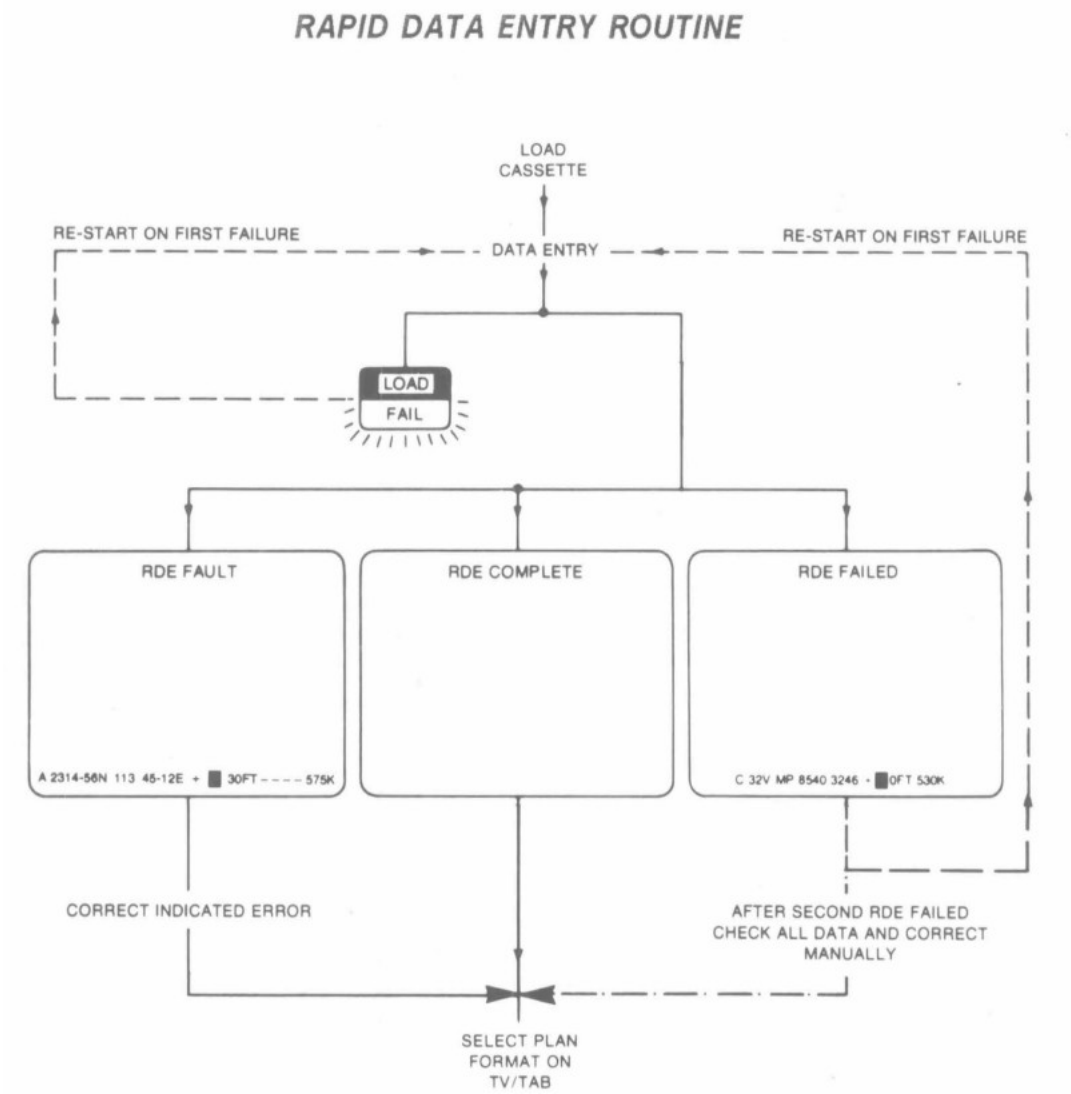

Manual Data Insertion.

Manual insertion of mission data and system data is performed using the MFK on the TV/TAB.
Each line of inserted navigation information from mission data is selected for display in the ROL on the TV/TAB.
When the appropriate characters of a particular ROL, have been inserted, the data are entered into the MC via the ENTER key.
In addition to the data insertion via TV/TAB MFKs and RDE, data may be inserted by means of RPMD/CRPMD Slew or MKR facility. Only the plan position of waypoints can be inserted by this method. Change of destination designator and additional information, e.g., height and GS, shall be inserted again via TV/TAB MFKs.
(Refer, to TV/TAB operation and to example of Mission Data Plan).

NOTE for Microsoft Flight Simulator:

Manual data insertion is not supported in this MSFS rendition.

NAVIGATION MODES AND OPERATION

The moding facility provides selection and control of navigation modes which depend on the availability and condition of the sensors. The navigation sensors IN, Doppler, SAHR, and ADC deliver the basic data for navigation moding. four navigation modes in conjunction with the MC arc provided and controlled via the NAV MODE selection butterns on the NMCP: Main mode (MAIN), Inertial Navigation mode (IN), Doppler/SAHR mode (DP + SR) and Air Data/SAIIR mode (AD + SR).

In the event of MC failure, steering information can be derived directly from the INCDU (Pure IN).

During the rear cockpit checks each required sensor will be set up and aligned. After *all* necessary conditions are fulfilled, the MC causes the upper white caption of the appropriate mode on the NMCP to illuminate and indicates that particular mode is available.
Navigation moding is then initiated by pressing the required MODE button of which the appropriate lower green SEL caption indicates the selection.

NOTE for Microsoft Flight Simulator:

In this MSFS rendition, the various navigation modes are not simulated: the underlying code is based on MSFS GPS navigation system and requires a valid flight plan.

STEERING MODES AND OPERATION

Track steering is controlled from the NMCP by two pushbuttons enabling selection of AUTO/MAN and STEER/HOLD.
Two basic steering modes are available: Manual Flight Plan (MFP) steering where the aircraft is flown to a single designated destination and Automatic Flight (AFP) Plan steering where the aircraft is flown to follow a planned route through a series of destinations.

NOTE for Microsoft Flight Simulator:

In-game steering modes are different from the ones of the real aircraft.

In AUTO mode, the aircraft will fly through the flight plan, switching automatically to the next waypoint once the navigation system determines that the a proper turn can be executed.If the autopilot is engaged and TRACK mode is activated, the plane will fly automatically through the flight plan.

In MAN mode automatic waypoint progression is inhibited and waypoints cna be manually selected with the TV/TAB shift switch.

AUTO / MAN selection is automatically linked to the STEER/HOLD selection in the game.

TRACK STEERING DISPLAYS

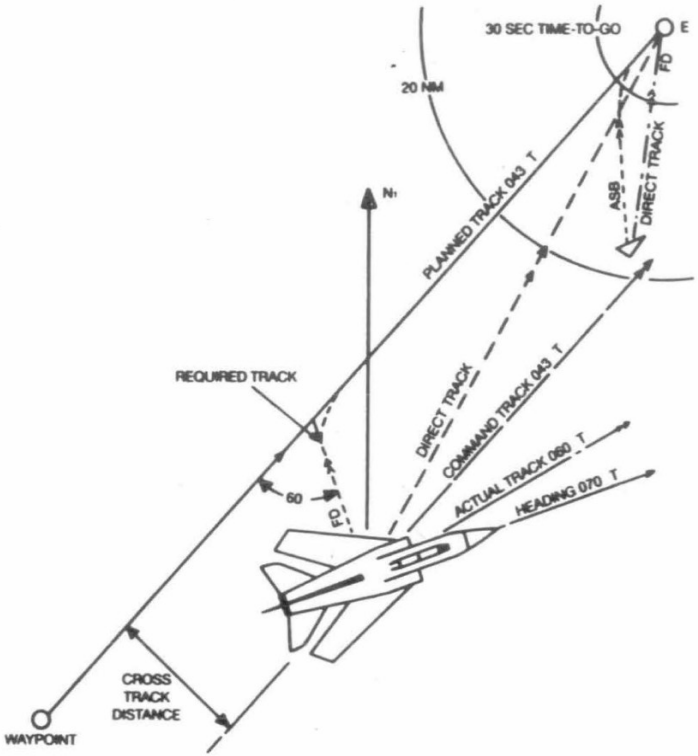

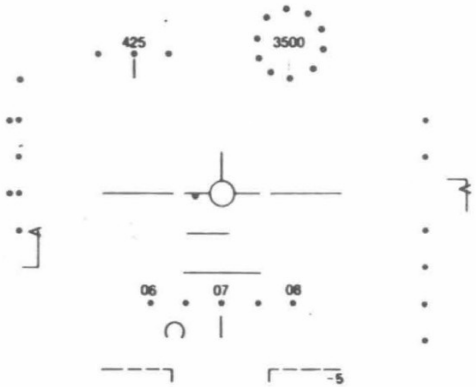

HEAD-UP DISPLAY

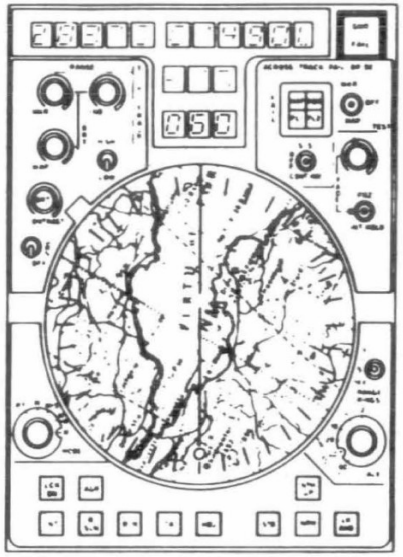

COMBINED RADAR AND PROJECTED MAP DISPLAY

NAV DATA	DISPLAY
PLANNED DEMANDED TRACK COMMAND TRACK	HSI: TRACK POINTER AND COUNTER TV/TAB: READOUT AND TRACK PARALLELS
REQUIRED TRACK	HUD: FD COMMAND (RANGE > 20 NM) AZIMUTH STEERING BUG (>30 SEC TO GO)
DIRECT TRACK	HUD: FD COMMAND (RANGE < 20 NM) AZIMUTH STEERING BUG (<30 SEC TO GO)
ACTUAL TRACK	HSI: ACTUAL TRACK POINTER TV/TAB: CENTER LINE AND SCALE CRPMD: READOUT AND TRACK LINE
HEADING	HUD: HEADING SCALE HSI: COMPASS CARD TV/TAB: HEADING POINTER
CROSS TRACK DISTANCE ERROR	HSI: LATERAL DEVIATION BAR (MAX. 4000 FT) TV/TAB: READOUT AND TRACK PARALLELS

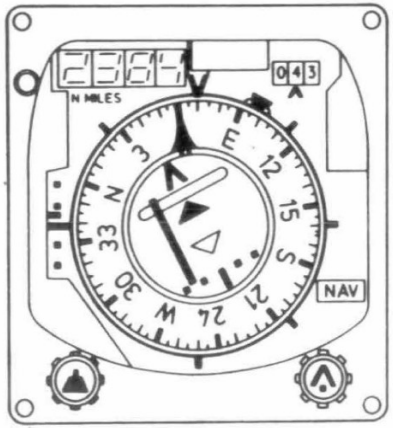

HORIZONTAL SITUATION INDICATOR

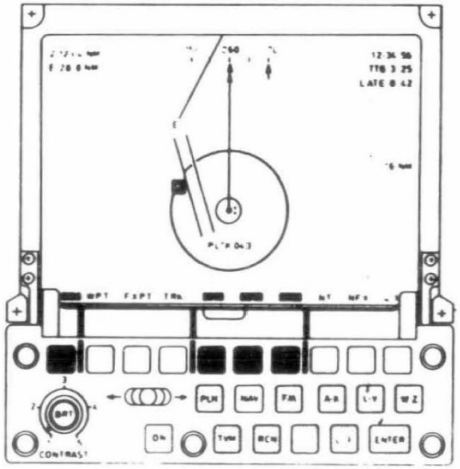

TV/TABULAR DISPLAY

INTEGRATED DISPLAYS AND CONTROLS

Integrated navigation systems data as well as the results of MC processing and calculation, are presented to both crew members via their respective cockpit displays and the parameters available depend on their selection and control.

TELEVISION/TABULATOR DISPLAY SYS*TEM* (TV/TAB)

The TV/TAB is a computer management terminal/monitoring equipment providing all navigation and attack information in the form of alphanumeric characters and symbolic patterns displayed on a television screen. Multi and fixed function keyboard facilities enable selection of TV/TAB operating modes and insert data for storage and updating in the MC.

In case of a waveform generator failure, a reversionary keyboard enables essential procedures.
The TV/TAB consists of one Waveform Generator (WFG) and two identical Display Units (DU) .
Display data are also controlled from the following facilities:
Navigation Mode Control Panel
Navigator's Weapon Aiming Mode Selector (NWAMS)
Navigator's Hand Controller (NHC)
Main Computer Control Panel (MCCP).

An interruptive BITE test format is generated by the waveform generator and presented on the screen when TEST is selected on the MCCP.

NOTE for Microsoft Flight Simulator:

MC, Waveform generator and IFU1 and IFU2 are required for the TV/TABs to operate in the game.Reversionary mode is not supported, instead an error message will be generated indicating what the simulation expects from the player.

Wave Form Generator (WFG)
The WFG in the rear right avionics cornpartment accepts display format data from th<.: MC and rnmk selection data from both TV/TAB Keyboards
These data are processd and generated into video suitable for the display on the two TV /TAB screens, which may present different formats sirnultanrnusly.
The WFG also generates the TEST format.

WFG control and indicator are located on the MCCP. They provide the following functions:

WFG CONTROL SWITCH
A three-position switch controls the WFG operating modes:

ON - The power supply is connected to the WFG and the TV/TAB display operates according to DU key selections.

TEST - A BITE is initiated and the WFG produces a test pattern which is displayed by either DU if the appropriate ON key is selected.

OFF - The power supply is disconnected from the WFG. The TV/TAB display operates in its reversionary mode, provided that the DU power ON key is selected.

OVERHEAT INDICATOR - The amber OHEAT indicator illuminates if the WFG overheats. It also illuminates when the WFG BITE detects a failure.

TV/TAB Display Units (DU1 + DU2)
The DUs arc identical and located on either side of the CRPMD in the rear cockpit, DU1 to left and DU2 to the right. Therefore two different formats can be provided for the navigator simultaneously.
The DU presents waveform generator outputs in video symbolic or tabular form on a screen area of 16 x 12 cm. Generally, distinctions made between items of primary importance, such as flight and target data which are large size indicated, and those e.g. designated by the multi function Keyboard. To eliminate superfluous information when in navigation and attack situation, certain data arc displayed only when selected. Key legends are written on

the bottom of the display in the various tabular formats.
Two autoluminance sensors on top of each DU monitor ambient lighting levels to maintain the brightness of the display at a preset level relative to the brightness of the background.
Display video is routed from each DU to a Head Down Display Recorder (HDDR) where sequences are recorded on film for subsequent analysis.

Each DU provides the following facilities:

SHIFT KEY TOGGLE

The three position shift key toggle switch, spring loaded to the centre position, is moved to the left or right to slew a writing marker along the ROL or to step through a series of destinations.

CONTRAST-BRIGHTNESS CONTROL KNOBS

The two concentrically mounted rotary CONTRAST-BRT switches are used to adjust the contrast and brightness of all display video .

FIXED-FUNCTION KEYBOARD (FFK)

The FFK consists of twelve push button keys at the centre and bottom row which, with the exception of the ON key, are illuminated white when power is supplied to the aircraft. The ON key illuminates white and bright only when it is selected and power is supplied to the equipment. The keys arc used to control the power supplies, select the basic display format, determine the primary mode of the MFK, and enter the data displayed on the ROL line into the MC.

MULTI FUNCTION KEYBOARD (MFK)

When the WFG is operating, the top row of ten keys forms the MFK. Key functions change with each format, and key caption markings arc selectable at both the FFK and MFK.

REVERSIONAR Y KEYBOARD (RKB)

When the WfG has failed the TV/TAB can be operated only in its reversionary mode. A sliding cover shall be raised after switching off the WFG to expose ten engraved captions which indicate the reversionary function of the MFK. The RKB enables the navigator to carry out essential procedures and actions associated with the CRPMD map.

NOTE for Microsoft Flight Simulator:

Reversionary mode and keyboards are not implemented in this simulation.

SECONDARY KEYBOARD

Three secondary keyboards DEST, DATA and RTE may be selected from the PLAN keyboard with the relevant multifunction keys. Via the DEST keyboards, destination data may be selected, corrected, or added to the MC. The DATA keyboard allows insertion or correction of navigational data, while selection of the RTE keyboard permits the current route to be displayed for changing or modification.

NOTE for Microsoft Flight Simulator:

Secondary keyboard is not implemented in this simulation.

TVITAB DISPLAY

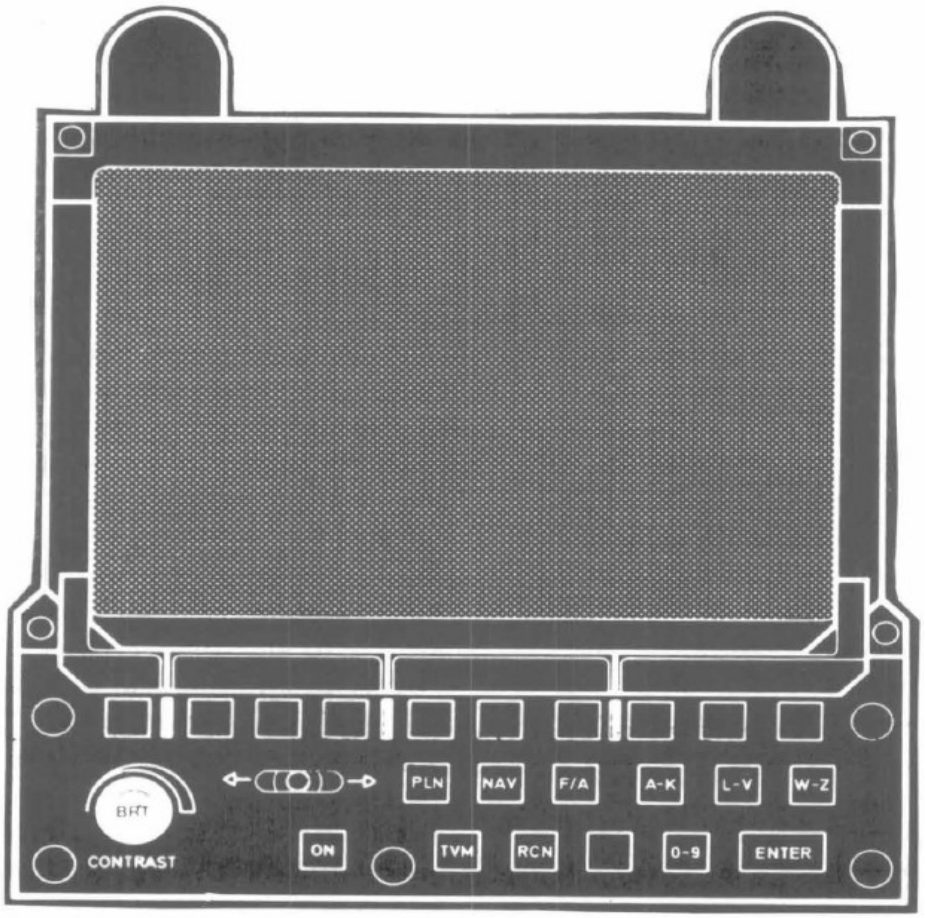

TEST FORMAT

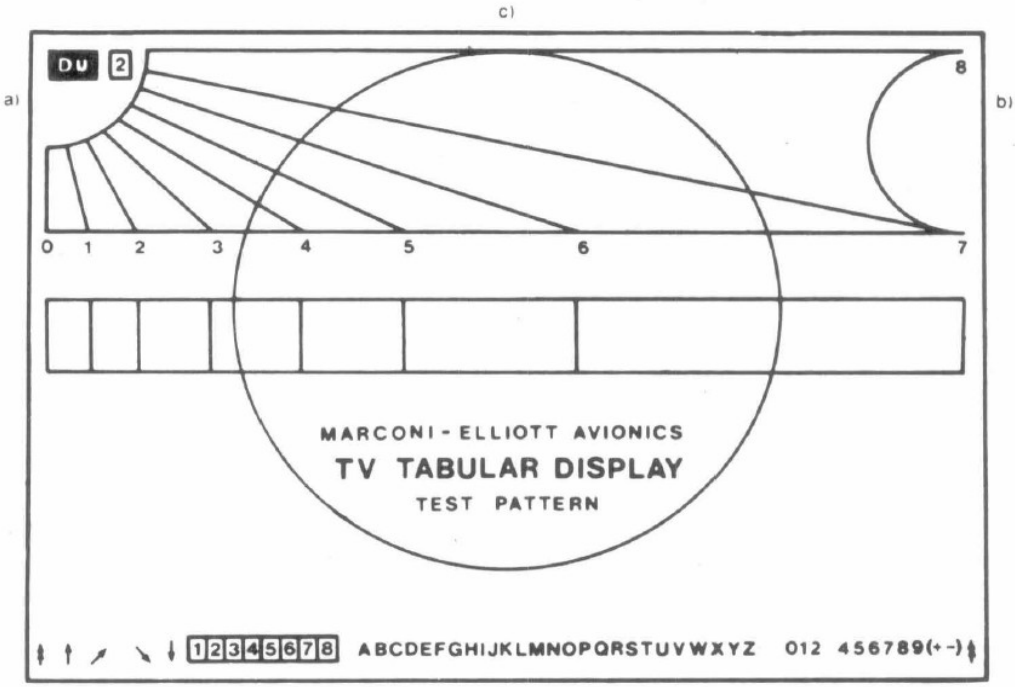

SCHEMATIC PLAN FORMATS

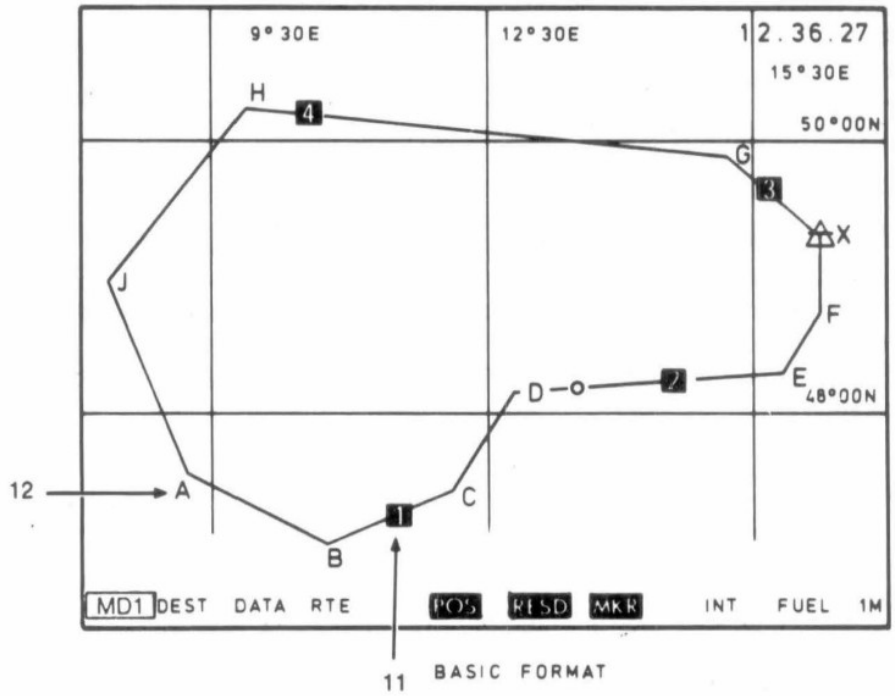

BASIC FORMAT

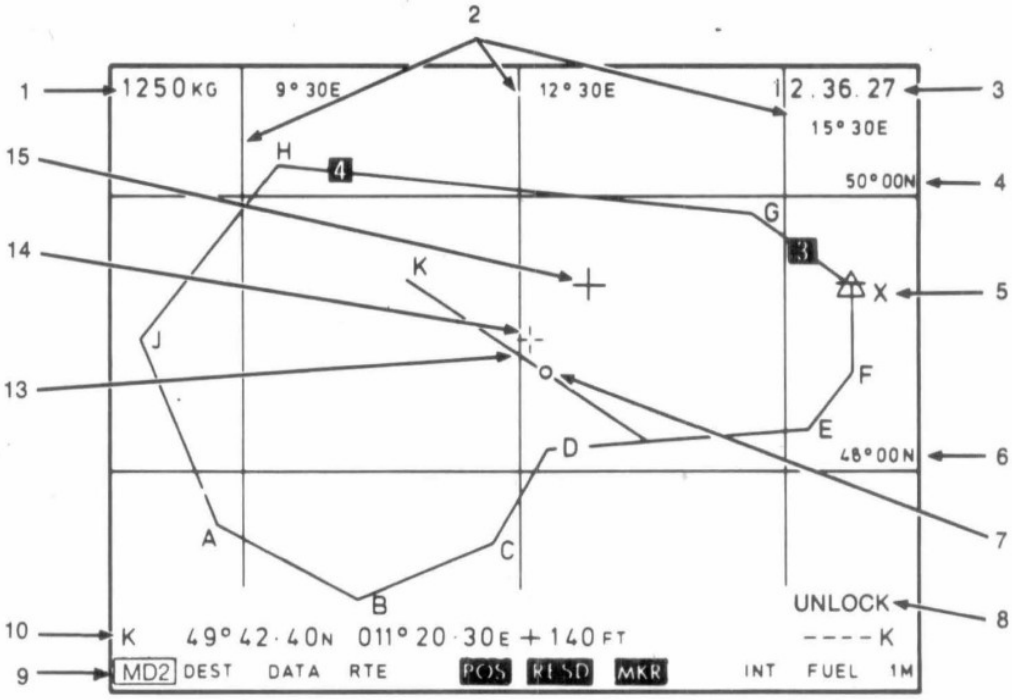

EXTRA DATA

1 FUEL STATE (FUEL SELECTED AT THE MFK)
2 LONGITUDE REFERENCE*
3 SYSTEM TIME (HOURS, MINUTES, SECONDS)*
4 LATITUDE REFERENCE*
5 TARGET
6 LATITUDE REFERENCE*
7 PRESENT POSITION*
8 DOPPLER UNLOCK INDICATION
9 MFK CURRENT FUNCTION*
10 READ-OUT LINE
11 (1, 2, 3, 4) FIXPOINTS*
12 (A–K) WAYPOINTS*
13 DEVIATION FROM PLANNED ROUTE
14 ACTIVE COMPUTER MARKER*
15 CRPMD CENTER POSITION MARKER (ONLY WHEN MAP SLEW ACTIVE)

* BASIC FORMAT

SCHEMATIC NAVIGATION FORMATS

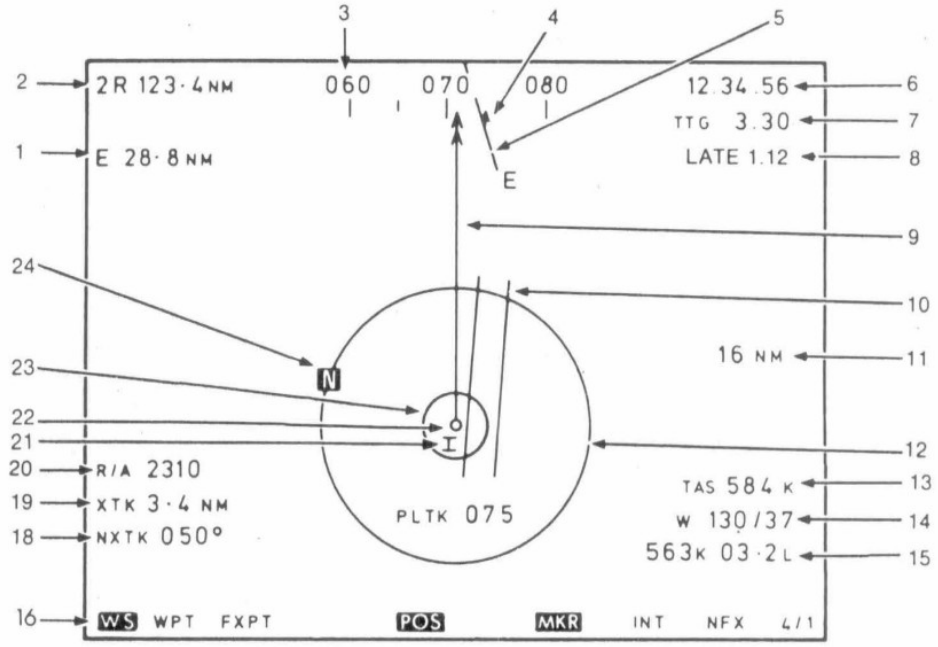

BASIC FORMAT

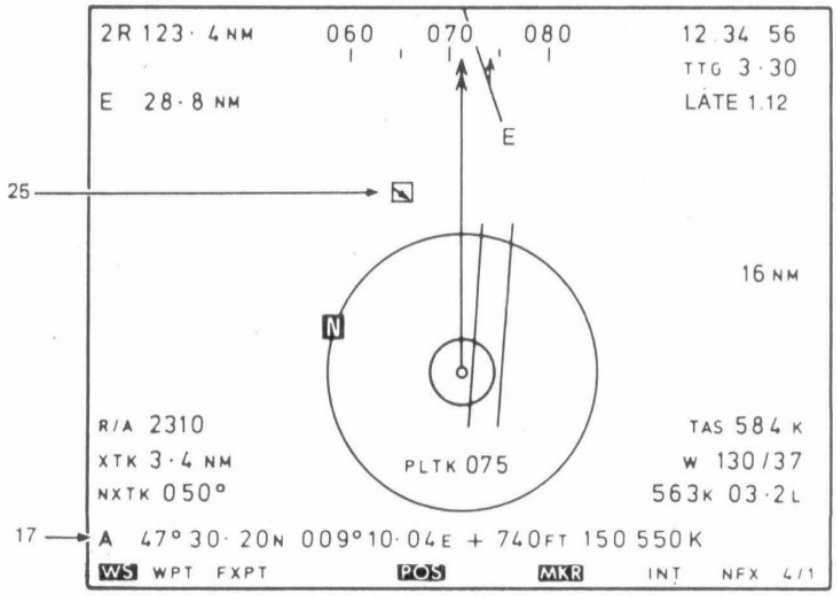

EXTRA DATA

1 DISTANCE TO NEXT WAYPOINT (E)
2 DISTANCE TO NEXT FIXPOINT (2) RADAR FIX
3 DEGREES OF TRACK/HEADING
4 AIRCRAFT CURRENT HEADING
5 TRACK FOR NEXT LEG
6 SYSTEM TIME (HOURS, MINUTES, SECONDS)
7 TIME-TO-GO TO NEXT DESTINATION (MINUTES, SECONDS)
8 TIME EARLY/LATE (MINUTES, SECONDS)
9 AIRCRAFT TRACK
10 PLANNED TRACK (1 NM BETWEEN LINES)
11 RADIUS OF RANGE RING
12 RANGE RING
13 TRUE AIRSPEED
14 WIND DIRECTION AND VELOCITY
15 DOPPLER GROUNDSPEED AND DRIFT
16 MFK CURRENT FUNCTIONS
17 READOUT LINE*
18 NEXT TRACK
19 CROSS-TRACK ERROR
20 RADAR ALTITUDE
21 IN POSITION INDICATOR (MAIN MODE)
22 PRESENT POSITION (MAIN COMPUTER)
23 KALMAN FILTER 95 % PROBABILITY CIRCLE
24 NORTH
25 INTELLIGENCE POINT (Example)*

* EXTRA DATA

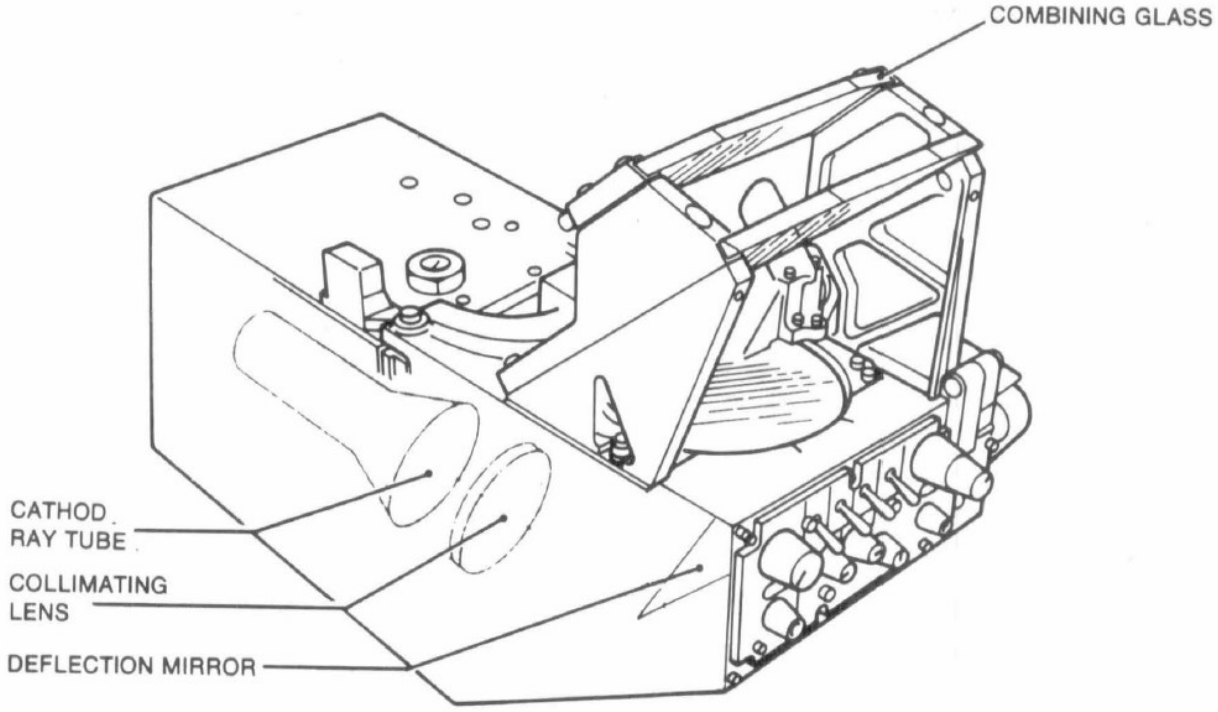

HEAD UP DISPLAY CONTROLS

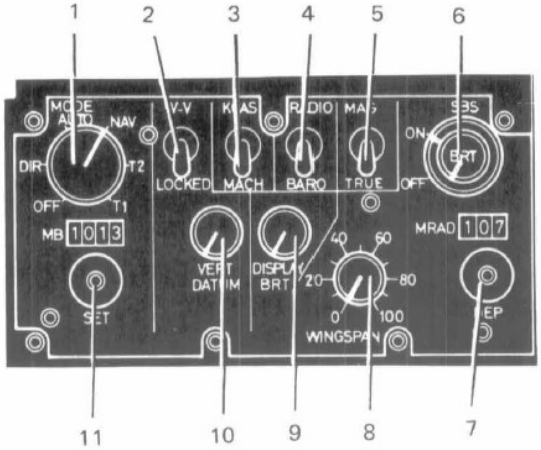

1 Mode selector knob
2 V-V/locked switch
3 KCAS/Mach switch
4 Radio/baro switch
5 MAG/TRUE switch
6 Standby sight control knob
7 Depression control knob and MRAD indicator
8 Wingspan control knob
9 Display BRT control knob
10 Vert datum control
11 Millibar set control knob and indicator

HEAD-UP DISPLAY UNIT (HUD)

The HUD, in the centre instrument panel, projects information in symbolic and numeric form into the pilot's field of view.
This source of information , in one form, provides steering demands to assist the pilot to steer the aircraft manually, and in another constitutes the primary source in an attack phase.
Symbols are generated at the command of the MC by the Electronics Unit (EU) and displayed by the Pilot's Display Unit (POU). They are presented, focussed at infinity, in the pilot's line of sight. The fixed dual combining glass with graded coatings enables the pilot to follow the display in elevation with limited head movement.
A Standby Sight (SBS) for reversionary weapon aiming is provided.
In weapon aiming and fixing sub-modes, the servo drive keeps the target bar, fixing cross, ranging reticle, and aiming pippcr in the field of view of the pilot at all depression angles.
A mechanical override and a standby sight for reversionary weapon aiming are provided. Symbols are suppressed if the EU BITE detects a faulty or incorrect input. Where alternate data are available from primary equipments the HUD logic automatically selects the inputs and the display will indicate accordingly
For HUD interruptive BITE, three Test formats are displayed as determined by the MODE and MAG/TRUE switches on the HUD control panel.

Power Supplies
The unit is supplied with 200 V/400 Hz 3-phase AC from the AC busbar XP 1, and with 28 V DC from the DC busbar PP2.
The SBS is supplied with 28 V DC from the DC busbar PPI .

Electronics Unit (EU)
The EU in the forward equipment compartment is a waveform generator, controlled by a high speed, on-line digital computer, and has the following functions: ·

- Generation of the necessary waveform for the display of the symbol repertoire.
- Selection, upon receipt of command signals, of appropriate symbols with proper priorities.
- Determination of position and motion of symbols according to data from other equipments.
- Operation of continuous in-flight internal monitoring.
- Operating of ground checkout procedures.

Pilot's Display Unit (POU)
The POU converts the waveforms generated by the EU into visible simbols which arc displayed on a Cathode Ray Tube (CRT) and presented in the pilot's line of sight by means of a collimator and combining glass.
The POU is positioned so that the combining glass lies in the pilot's line of sight with its outline coinciding approximately with the frame of the windscreen. The display field of view is 25°.
A solar cell in the PDU continuously monitors the brightness of the background against which the display is observed. The cell controls a circuit which automatically maintains the contrast level of the display as selected by the pilot.

Optical Projection System
The optical projection system comprises:
- An optical arrangement of lenses and a deflection mirror.
- A SBS optical projection facility and a collimating lens.
- A servo-controlled, symbol positioned, combining glass assembly.

COLLIMATING LENS AND DEFLECTION MIRROR

The lens and mirror system projects the display onto the combining glass. The projected image appears at a great distance ahead of the aircraft – focussed at infinity - and therefore at the location of distant objects in the pilot's view. This ensures that *the pilot's eyes do not need to refocus when looking* from distant objects to HUD symbols and vice versa, and also that the pilot's head movements do not introduce a parallax shift between HUD symbols and distant objects.

DUAL COMBINING GLASS

The dual combining glass is a fixed assembly which provides the symbology in a total vertical field of view with

minimum head movement.

Head-Up Display Control Panel

The HUD control panels is located in the front cockpit on the main instrument panel and carries all the controls and indicators for the operation of the HUD:

MODE SELECTOR KNOB
A six position rotary MODE switch with the following positions:

OFF - Power supplies are disconnected and the HUD is inoperative (except for SBS facility).

DIR - Attitude display, scales, and readouts are received direct from the primary navigation sensors; IN, SAHR, RA, ADC, and AFDS.

AUTO - Displayed information is received from the MC. Display format changes in accordance with commands from the MC.

NA V The MC command is overridden to present and maintain a Navigation format, even if the navigator makes a selection, e.g. *FI* A, which normally would result in a changed Attack format.

T2 BITE checkout of the Attack formats. Separate Bombs and Guns formats are selectable by the selection of the MAG/TRUE switch.

T 1 Navigation Test format is displayed during BITE checkout

NOTE for Microsoft Flight Simulator:

In this MSFS rendition, test modes are not implemented and there is no functional differences between DIR / AUTO and NAV modes.

V-V/LOCKED SWITCH

The two position V-V/LOCKED toggle switch governs the position of the aircraft symbol. When V-V is selected the symbol is determined by the aircraft velocity vector, that is the flight path, in elevation and azimuth. If LOCKED is selected the symbol is locked in azimuth with respect to the LFD and adjustable in elevation by use of th VERTICAL DATUM control knob.

VERTICAL DATUM CONTROL KNOB

The rotary VERTICAL DATUM knob is used to adjust the IllJD symbology in elevation from 0° to -10° from the LFD when the V-V/LOCKED switch is in the LOCKED position.

KCAS/MACH SWITCH

A two position toggle switch selects the ADC outputs of aircraft speed to be displayed:

KCAS - Knots calibrated airspeed displayed on the POU.

MACH - Mach number displayed on the POU .

RADIO/BARO SWITCH

A two position toggle switch selects height to be displayed:

RADIO - Radio altimeter height, prefixed by the letter R, displayed on the POU.

BARO - Barometric corrected height (altitude) without prefix, displayed on the POU.

MAG/TRUE SWITCH

A two position toggle switch with the following positions:

MAG - Magnetic heading is displayed, prefixed by the letter M. During test with the MODE switch in T2, the Bomb Attack Test format is displayed.

TRUE - True heading is displayed without a prefix. In the test mode position T2, the Gun Attack Test format is displayed.

STAND BY SIGHT CONTROL KNOB

The two concentric rotary SBS switches provide the following functions:

ON/OFF

The outer ON/OFF rotary switch controls the power supply to the SBS.
When selected ON, the SBS symbol for reversionary weapon aiming is displayed on the POU.
BRT The inner BRT potentiometer switch adjusts the brightness of the SBS symbol.

DEPRESSION CONTROL KNOB

The rotary DEP potentiometer is used to adjust the depression angle of the SBS.

MRAD INDICATOR

The three digit MRAD indicator displays the depression angle in milliradians from 0 to –260 MRAD from the LFD.

WINGSPAN CONTROL KNOB

The rotary WINGSPAN switch is used to set the known or estimated wingspan of target aircraft in air-to-air attacks, to provide a datum for the determination of range to target, using stadiametric ranging and to position range bars on the Continuously Computed Impact Line (CCIL). The control scale is calibrated from O to 100 ft in 20 ft increments.

DISPLAY BRIGHTNESS CONTROL KNOB

The rotary DISPLAY BRT potentiometer is used to set the level of display brightness.
The relationship to the prevailing ambient lighting condition is held constant thereafter by a solar cell on the HUD.

MILLIBAR SET CONTROL KNOB AND INDICATOR

The rotary MB SET switch sets the barometric pressure for the barometric corrected altitude in the ADC. The pressure setting is indicated in millibars on a 4 digit indicator labelled MB.

HUD Symbol Repertoire

The EU produces and updates display symbology every 20 msec. The symbols, consisting of a single element such as the aiming pipper or of several elements such as the altitude display, are grouped together in formats to, display the relevant data for navigation and weapon aiming.
The symbols may be aircraft oriented, e.g. the aircraft symbol, so that their display remains aligned with the aircraft wings during rolling maneuvers, or they may be ground oriented, e.g. the target bar, which remains parallel to the horizon. The various display symbols are described as follows and their format depend on the selection of:

- the HUD mode of operation
- the formats of the TV/TAB
- the weapon aiming mode
- the phase of attack
- the SMS selections (WCPI and WCP2)

AIRCRAFT SYMBOL

The aircraft symbol in the form of a winged circle provides an aircraft flight path reference. Its wings remain always aligned· with the actual aircraft wings.
When the V-V/LOCKED switch is in LOCKED position, the symbol is locked in azimuth, indicated by a vertical tail, with respect to the LFD. In this case the display can be moyed by the vertical datum control.
When the switch is in V-V position, the symbol has no vertical tail fitted and is free in elevation and azimuth but positioned by the aircraft velocity vector. In this case the horizon bars are always positioned on the horizon and drift moves the aircraft symbol to the respective side indicating the flight path.
If the symbol reaches the HUD lower limit, it is parked with a locked indication. The aircraft symbol is position-limited to ± 5° in azimuth and 0° to 15.5° in elevation.
In weapon aiming mode the *aircraft symbol is positioned by the velocity vector,* but may be overridden by the MC.

NOTE for Microsoft Flight Simulator:

Glideslope and localizer lines are not implemented in MSFS.

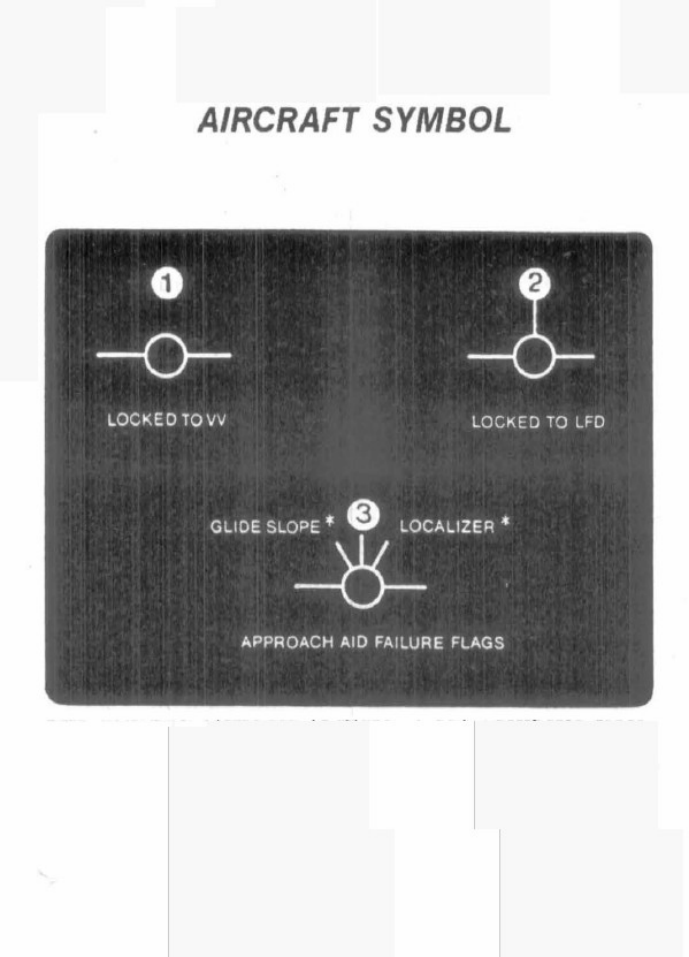

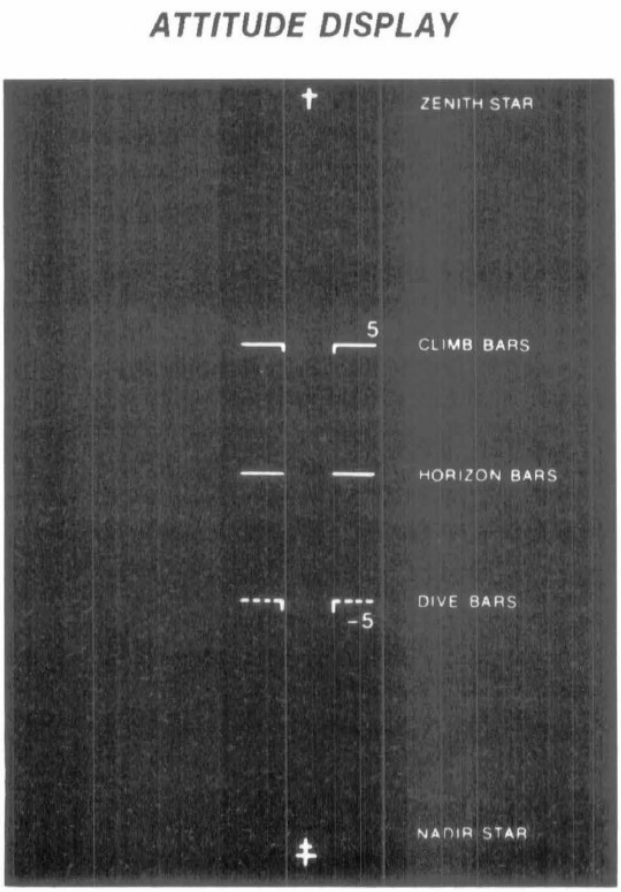

***ATTITUDE SYMBOLS (FLIGHT PATH* SYMBOLS)**

The attitude symbols comprise horizon bars, climb and dive bars, zenith star and nadir star. At the centre of the attitude display a pair of solid horizon bars is displayed.
Above and below the horizon bars, solid climb and dashed dive bars represent climb/dive angles between 0° and ± 90° when read against the aircraft symbol or gun cross.
During LOCKED mode only those bars, which are less than 7.5° from the reference symbol in elevation, are displayed. Therefore a maximum of three pair of attitude bars are displayed.
In V-V mode the same conditions apply, except when the aircraft symbols arc depressed between - 0° and - 12°, where - go becomes the new reference datum for the display of the attitude bars.

The numerals are displayed in increments of 5°, those for the dive arc written below and carry a negative sign, those for the t:limb appear above the climb bars.
The short vertical legs on the climb/dive bars correspond in lenght to 1 .5° of dive and arc a useful indication of the glidcslopc and in inverted maneuvers.
The attitude pattern is displayed with its centre line always lying on the aircraft symbol or gun cross, about which the pattern rotates freely to indicate bank angle and moves upward or downward to indicate pitch. The zenith star is displayed when the aircraft climbs at the top of the attitude display to indicate a 90° nose-up attitude. The nadir star, and inverted Cross of Lorraine, is displayed at the bottom of the display to indicate a 90° nose-down attitude.

SCALES AND READ-OUTS

The HUD provides indications and numeric readouts of all the essential flight parameters: aircraft speed, height, vertical speed, heading, cross track error and angle of attack.

SCALES AND READ-OUTS

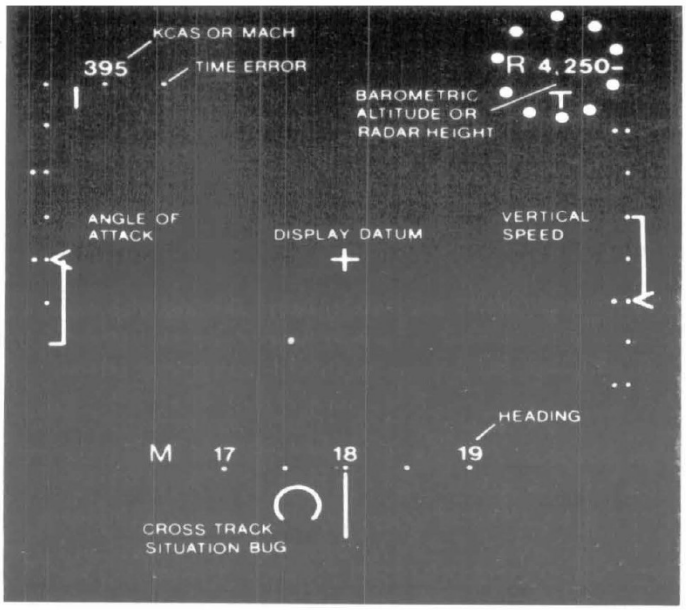

Aircraft Speed - Aircraft speed is presented as a 3 digit readout in either KCAS or Mach number, depending on the selection of the KCAS/MACH switch.

Time Error Scale - A time error scale indicates time early /late by means of a moving pointer against a scale of three dots. The centre dot represents "on time", the LH dot 30 sec late, and the RH dot 30 sec early, based on present groundspeed to the next waypoint (not in A/A mode and IN-HUD Alignment).

NOTE for Microsoft Flight Simulator:

Time error scale is not implemented in this MSFS rendition.

Height - Barometric or radar heights arc displayed as a five digit numerical _read-out (selected by the RADIO/BARO switch on the HUD control panel), surrounded by a circular scale of 10 dots and a pointer which rotates clockwise once per 1000 feet, starting from the top mid (12 o'clock) position. When radar height is indicated, the first digit is replaced by the letter "R".

For heights below 1000 ft, the comma is retained to introduce the possibility of a reading error, for heights below 100 ft, a "0" is displayed in the hundreds position and for negative barometric heights, a minus sign is displayed before the comma. When TF is engaged the letter T appears below the height display.

NOTE
If RADIO is selected and altitude flown is above 5000 ft, height indication is lost.

Vertical Speed A thermometer type pointer indicates vertical speed in the range – 2000 ft /min to + 1000 ft/min, against a fixed vertical scale of seven dots. The + 1000 ft, and – 2000 ft are indicated by twin dots for ease of scale reading. Spacing between the dots is equivalent to 500 ft/min. The pointer itself can move over a range from - 3000 ft/min to + 2000 ft /min.

Heading - A horitontal 5 dot heading scale, marked every 5° with a dot and numerically annotated every I 0° moves against a fixed lubber line. At least two numerical annotations are visible at one time and the heading can be either true or magnetic in *all* modes as selected. When magnetic heading is presented, a letter "M" is displayed to the left of the scale.

Azimuth Steering Bug - The azimuth steering bug (ASB) is permanently displayed and provides steering information required to regain planned track with a maximum closing angle of 45°. It can be used in manual flight as the primary steering information when in weapon aiming. The ASB continues to provide information to regain planned track even when distance-to-go next steering point is less than 20 NM. A switch-over to "direct steer" is given only when time-to-go is less than 30 seconds or if the direct steering demand of the FD is greater than the ASB demand. In Weapon Aiming within 20 NM range to the target, the pilot may decide to follow the AS B to regain planned track and he will ignore the fD direct steering demand to the target.

Angle of Attack ~ A thermometer type pointer displays aircraft angle of attack in the range 0° t*o + 25° in 5° increments against a ·vertical 5 dot* scale. The 10° and 20° angles are indicated by twin dots for easy scale reading.

FLIGHT DIRECTOR SYMBOL

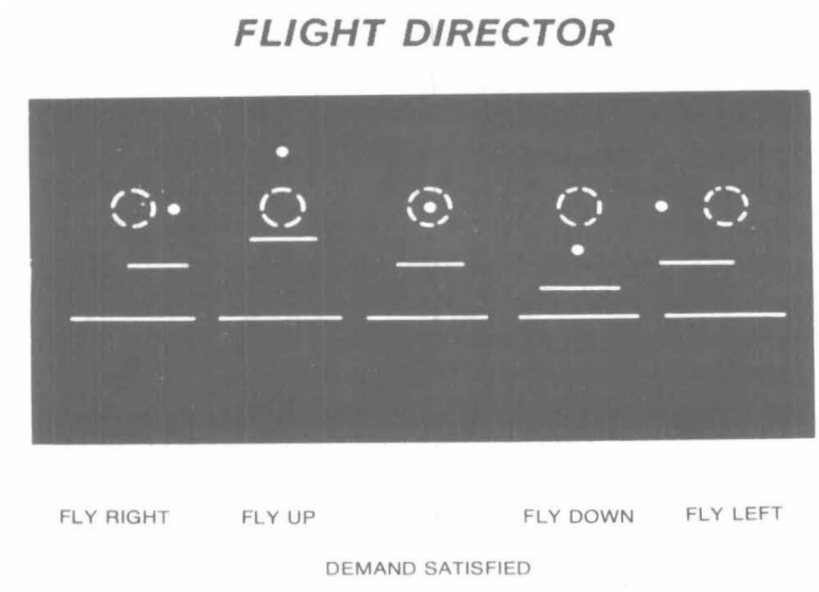

The flight director symbol consists of a dot and two horizontal cue lines forming an "elastic" triangle.

The lower line is twice the lenght of the upper and both remain parallel to the natural horizon, the dot is forming the apex of the triangle. When the flight director demand is satisfied, the dot is in the centre of the aircraft symbol. The symbol is displayed only when FD is pressed on the AFDS and the MODE selector on the HUD is switched to DIR or AUTO.
If AP is engaged the horizontal lines arc suppressed and only the dot remains. The pilot may utilize the display to monitor the operation of the AP in all modes. Pitch demands arc indicated by the vertical *displacement of the dot.* The lower line maintains its position and the upper line moves in sympathy with the dot so as to maintain a position midway between dot and lower line.
Roll demands are indicated by the dot moving left or right of datum. The lower line maintains its position and the upper line moves in accordance with the dot, so that its centre lies on an imaginary line joining the dot to the centre of the lower line. When both the flight director and the autopilot are engaged the cue lines are suppressed and only the dot remains. Movement of the FD symbol in relation to the aircraft symbol is limited to ± 3° horizontally and ± 2° vertically.

AIRCRAFT GENERAL ARRANGEMENT

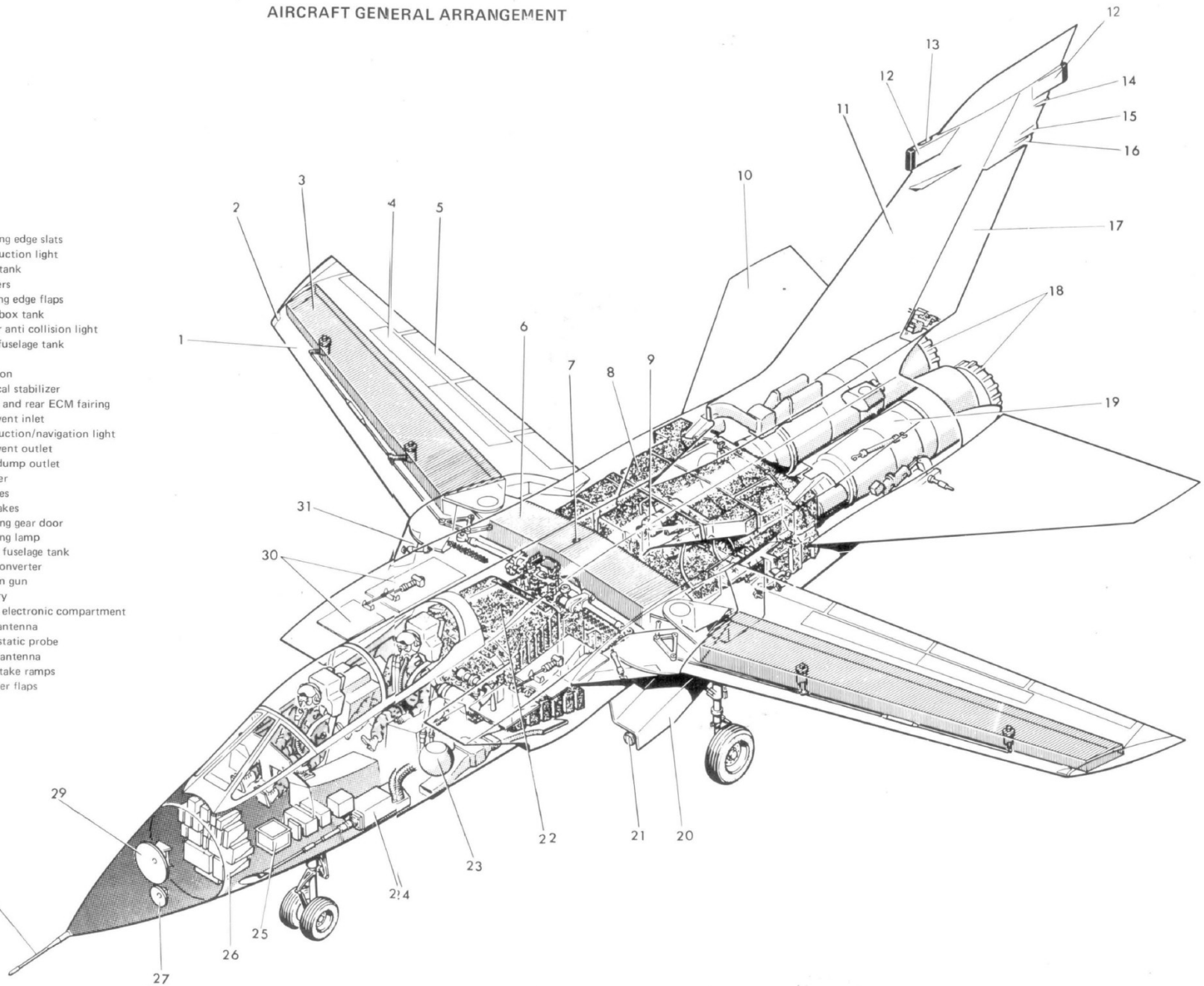

FRONT COCKPIT (STRIKE AND TRAINER)

1 Engine start panel
2 Emergency landing gear selector lever
3 Secondary control surfaces position indicator
4 Landing gear selector lever
5 Landing/Taxi lights selector switch
6 Low pressure cocks selector switches
7 Vertical speed indicator
8 Lift dump indicator
9 Thrust reverse override switch and indicator
10 Landing gear position indicator
11 Arrester hook push-button and indicator
12 NWS indicator/selector
13 Master Armament Safety Switch
14 Radar altimeter
15 Pilot's Wams Panel
16 Instrument lights dimmer
17 Combined speed indicator
18 ESRRD (E-Scope repeater radar display)
19 Attitude director indicator
20 Attention getter
21 Late arm switch
22 Low height warning indicator
23 Angle of attack indicator
24 Head up display
25 Engine RPM indicator
26 Engine fire extinguisher buttons

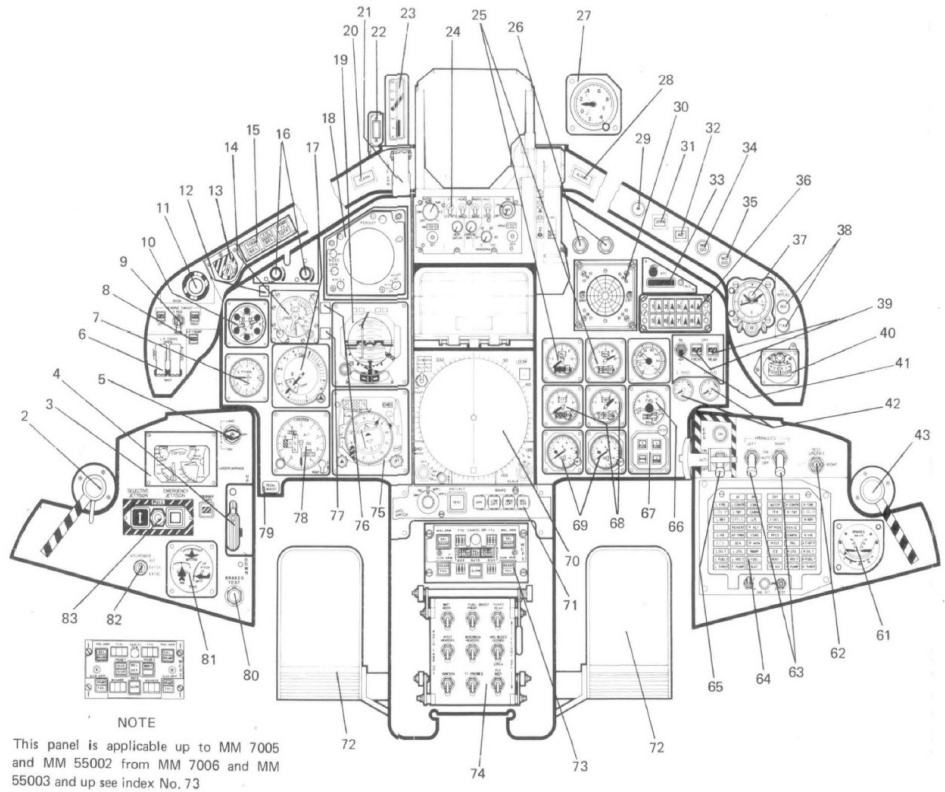

NOTE

This panel is applicable up to MM 7005 and MM 55002 from MM 7006 and MM 55003 and up see index No. 73

27 Accelerometer
28 Attention getter
29 Manouvre indicator
30 Radar warning CRT bearing indicator
31 IFF mode 4 indicator lights
32 Approach progress indicator
33 Remote channel/frequency indicator
34 Reheat operation light (Post Mod 01670 deleted)
35 Reheat operation light (Post Mod 01670 deleted)
36 Threat warning indicator
37 Clock
38 In flight refuelling indication lights
39 Oxigen flow indicators
40 Standby magnetic compass
41 Engine RPM indicator selector switch
42 Hydraulic pressure gauges
43 Brake selector lever
44 Safety pins stowage
45 Safety pins stowage
46 Fuel control panel
47 IFF control panel
48 Seat rise/lower switch
49 Environmental control panel
50 Emergency UHF
51 External lights control panel
52 Fuel temperature gauges

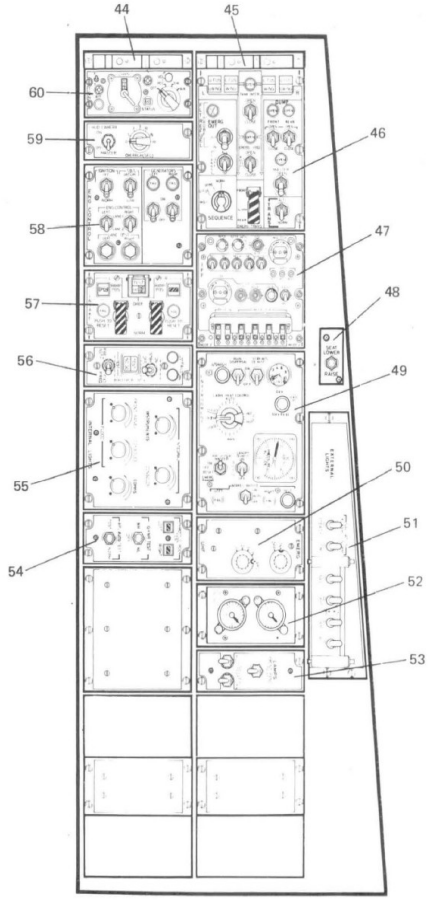

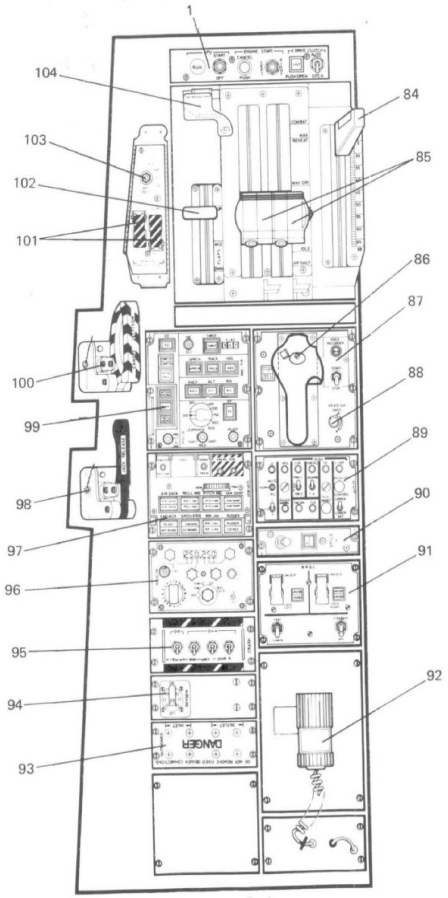

53 Lamps test panel
54 Engine test panel
55 Internal lights panel
56 Terrain following radar control panel
57 Air intake ramps control panel
58 Engine control panel
59 HUD camera control panel
60 TACAN control panel
61 Brakes triple pressure gauge
62 Hydraulic utilities test switch
63 Hydraulic pressurization switches
64 Central warning panel
65 Emergency power system switch/indicatorr
66 Engine fuel flow meter
67 Fuel content indicator and selector unit
68 Engine temperature indicators
69 Nozzle area indicators
70 Repeater projected map display
71 Pilot's HSI mode switch and WAMS indicator panel
72 Rudder pedals
73 Weapons control panel No. 2
74 Rapid take off panel
75 Horizontal situation indicator
76 Brisk indicator
77 AP indicator
78 Altimeter
79 Rudder pedals adjuster
80 Brakes test button
81 Three-axes trim indicator
82 APU power switch
83 Selective/emergency jettison button
84 Wing-sweep lever
85 Throttles
86 Pilot's hand controiler
87 Voice recorder control panel
88 Head up instrument dimmer
89 CCS control panel
90 SPILS control panel
91 Bomb release safety lock control panel
92 Wander lamp
93 Oxigen connection panel
94 Oxigen supply panel
95 Crash panel
96 V/UHF control panel
97 CSAS control panel
98 Canopy jack release handle
99 AFDS control panel
100 Internal canopy jettison handle
101 Emergency flaps/airbrakes switches
102 Flaps lever
103 Anti-dazzle switch
104 Taxi thrust lever

REAR COCKPIT (STRIKE)

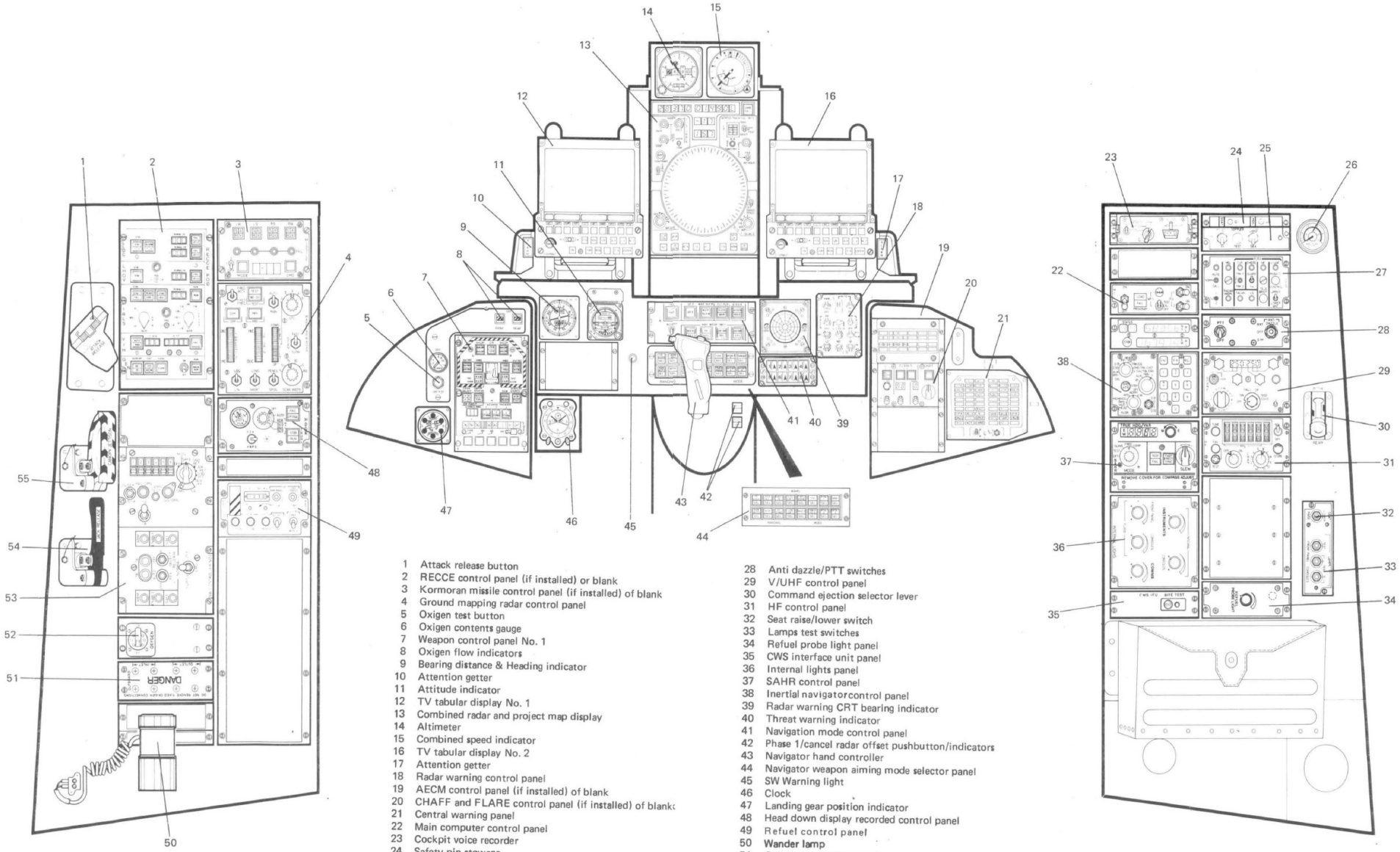

1 Attack release button
2 RECCE control panel (if installed) or blank
3 Kormoran missile control panel (if installed) of blank
4 Ground mapping radar control panel
5 Oxigen test button
6 Oxigen contents gauge
7 Weapon control panel No. 1
8 Oxigen flow indicators
9 Bearing distance & Heading indicator
10 Attention getter
11 Attitude indicator
12 TV tabular display No. 1
13 Combined radar and project map display
14 Altimeter
15 Combined speed indicator
16 TV tabular display No. 2
17 Attention getter
18 Radar warning control panel
19 AECM control panel (if installed) of blank
20 CHAFF and FLARE control panel (if installed) of blank
21 Central warning panel
22 Main computer control panel
23 Cockpit voice recorder
24 Safety pin stowage
25 Doppler control panel
26 Voltmeter (Post Mod 01662)
27 CCS control panel
28 Anti dazzle/PTT switches
29 V/UHF control panel
30 Command ejection selector lever
31 HF control panel
32 Seat raise/lower switch
33 Lamps test switches
34 Refuel probe light panel
35 CWS interface unit panel
36 Internal lights panel
37 SAHR control panel
38 Inertial navigator control panel
39 Radar warning CRT bearing indicator
40 Threat warning indicator
41 Navigation mode control panel
42 Phase 1/cancel radar offset pushbutton/indicators
43 Navigator hand controller
44 Navigator weapon aiming mode selector panel
45 SW Warning light
46 Clock
47 Landing gear position indicator
48 Head down display recorded control panel
49 Refuel control panel
50 Wander lamp
51 Oxigen connection panel
52 Oxigen supply control panel
53 Special weapon control panel
54 Canopy jack release handle
55 Internal canopy jettison handle